European Journal of Control (1995)1:62

European Journal of Control

Identification of Normalised Coprime Plant Factors from Closed-loop Experimental Data

Paul M. J. Van den Hof, Ruud J. P. Schrama[1], Raymond A. de Callafon[2] and Okko H. Bosgra

Mechanical Engineering Systems and Control Group, Delft University of Technology, The Netherlands

Recently introduced methods of iterative identification and control design are directed towards the design of high performing and robust control systems. These methods show the necessity of identifying approximate models from closed-loop plant experiments. In this paper a method is proposed to identify approximate normalised coprime plant factors from closed-loop data. The fact that normalised *plant factors are estimated gives specific advantages, both from an identification and from a robust control design point of view. It will be shown that the proposed method leads to identified models that are specifically accurate around the bandwidth of the closed-loop system. The identification procedure fits very naturally into a recently developed iterative identification/control design scheme based on $\mathcal{H}_\infty$ robustness optimisation. The identification scheme is illustrated with experiments on the radial servo mechanism in a compact disc player.*

Keywords: Closed-loop identification; Coprime factorisations; Gap-metric; Robust control; System identification

1. Introduction

Recently it has been motivated that the problem of designing a high performance control system for a plant with unknown dynamics through separate stages of (approximate) identification and model-based control design requires iterative schemes to solve the problem [1–7]. In these iterative schemes each identification is based on new data collected while the plant is controlled by the latest compensator. Each new nominal model is used to design an improved compensator, which replaces the old compensator, in order to improve the performance of the controlled plant.

A few iterative schemes proposed in the literature have been based on the prediction error identification method, together with LQG control design [7–9]. In [1,2,4,6,10] iterative schemes have been worked out, employing a Youla parametrisation of the plant, and thus dealing with coprime factorisations in both identification and control design stages; as control design methods an $\mathcal{H}_\infty$ robustness optimisation procedure of [11,12] is applied in [4,6,10], while in [1,2] the IMC-design method is employed. Alternatively, in [13] the identification and control design are based on covariance data. In [1] the IMC-design method is employed, and the identification step is replaced by a model reduction based on full plant knowledge. Alternatively, in [14] an iteration is used to build prefilters for a control-relevant prediction error identification from one open-loop data set. For a general background and a more extensive overview and comparison of different iterative schemes the reader is referred to the survey papers [15–17].

[1]Now with the Royal Dutch/Shell Company.
[2]The work of Raymond de Callafon is sponsored by the Dutch 'Systems and Control Theory Network'.

Correspondence and offprint requests to: Paul M. J. Van den Hof, Mechanical Engineering Systems and Control Group, Delft University of Technology, Mekelweg 2, 2628 CD Delft, The Netherlands. E-mail: vdhof@tudw03.tudelft.nl

Received 12 December 1994; Accepted 26 April 1995
Recommended by B. Egardt and M. Gevers

One of the central aspects in almost all iterative schemes is the fact that the identification of a control-relevant plant model has to be performed under closed-loop experimental conditions. Standard identification methods have not been able to provide satisfactory models for plants operating in closed-loop, except for the case that the plant is stable and input/output dynamics and noise characteristics can be modelled exactly.

Recently introduced approaches to the closed loop identification problem [1,4,17–20] show the possibility of also identifying approximate models, where the approximation criterion (if the number of data tends to infinity) becomes explicit, i.e. it becomes independent of the – unknown – noise disturbance on the data. This has opened the possibility of identifying approximate models from closed-loop data, where the approximation criterion explicitly can be 'controlled' by the user, despite a lack of knowledge about the noise characteristics. In the corresponding iterative schemes of identification and control design, this approximation criterion then is tuned to generate a control-relevant plant model. The identification methods considered in the iterative procedures presented in [1,4,10] employ a plant representation in terms of a coprime factorisation $P = ND^{-1}$, while in [4,10] the two plant factors N, D are separately identified from closed-loop data.

Coprime factor plant descriptions play an important role in control theory. The parametrisation of the set of all controllers that stabilise a given plant greatly facilitates the design of controllers [21]. The special class of *normalised* coprime factorisations has its applications in design methods [11,12] and robustness margins [22–24]. If we have only plant input-output data at our disposal then the question, how to model normalised coprime plant factors as well as possible, becomes relevant. Besides advantages with respect to control design, normalisation of coprime factorisations will also be shown to have specific merits from an identification point of view.

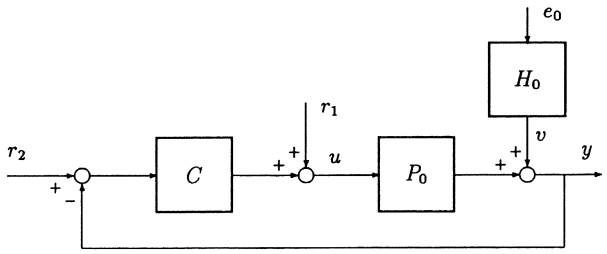

Fig. 1. Feedback configuration.

In this paper we will focus on the problem of identifying normalised coprime plant factors on the basis of closed-loop experimental data.

As an experimental situation we will consider the feedback configuration as depicted in Fig. 1, where P_0 is an LTI-(linear time-invariant), possibly unstable plant, H_0 a stable LTI disturbance filter, e_0 a sequence of identically distributed independent random variables and C an LTI-(possibly unstable) controller. The external signals r_1, r_2 can either be considered as external reference (setpoint) signals, or as (unmeasurable) disturbances. In general we will assume we have available only measurements of the input and output signals u and y, and knowledge of the controller C that has been implemented. We will also regularly refer to the artificial signal $r(t) := r_1(t) + Cr_2(t)$. First we will discuss some preliminaries about normalised coprime factorisations and their relevance in control design. In Section 3 a generalised framework is presented for closed-loop identification of coprime factorisations. Next we present a two-step procedure for identification of normalised factors. In Section 5 we will analyse the corresponding asymptotic identification criterion, and we will discuss the close relation with robustness margins in a gap-metric sense, being specifically relevant for the consecutive control design. In Section 6 we will show the experimental results that were obtained when applying the identification algorithm to experimental data obtained from the radial servomechanism in a CD (compact disc player).

Concerning notation, $\mathcal{RH}_\infty$ will denote the set of real rational transfer functions in $\mathcal{H}_\infty$, analytic on and outside the unit circle; $\mathbb{R}[z^{-1}]$ is the ring of (finite degree) polynomials in the indeterminate z^{-1}; q is the forward shift operator: $qu(t) = u(t+1)$; $(\cdot)^*$ denotes complex conjugate transpose, and $col(r_1, r_2) = [r_1^T, r_2^T]^T$.

2. Preliminaries

Considering the feedback structure as depicted in Fig. 1 we will state that C stabilises the plant P_0 if the mapping from $col(r_1, r_2)$ to $col(y, u)$ is stable, being equivalent to $T(P_0, C) \in \mathcal{RH}_\infty$ with

$$T(P_0, C) = \begin{bmatrix} P_0 \\ I \end{bmatrix} [I + CP_0]^{-1} [C\, I] \tag{1}$$

Consider any LTI system P, then (following [2]) P has a *right coprime factorisation* (*rcf*) (N, D) over $\mathcal{RH}_\infty$ if there exist $U, V, N, D \in \mathcal{RH}_\infty$ such that

$$P(z) = N(z)D^{-1}(z); \quad UN + VD = I \tag{2}$$

In addition a right coprime factorisation (N, D) of P is called *normalised* if it satisfies

$$N^*N + D^*D = I \tag{3}$$

Dual definitions exist for left coprime factorisations (*lcf*).

One of the properties of normalised coprime factors is that they form a decomposition of the system P in minimal order (stable) factors. In other words, if the plant has McMillan degree n_p, then normalised coprime factors of P will also have McMillan degree n_p.[1] In the scalar case this implies that there will always exist polynomials $a, b, f \in \mathbb{R}[z^{-1}]$ of degree n_p such that $N = b(z^{-1})f(z^{-1})^{-1}$ and $D = a(z^{-1})f(z^{-1})^{-1}$.

In robust stability analysis normalised coprime factors play an important role in robustness issues with respect to several perturbation classes of systems. One of the important ones is a perturbation class that is induced by the gap-metric [22]. This gap-metric between two (possibly non-stable) systems P_1, P_2 is defined as $\delta(P_1, P_2) = max\{\vec{\delta}(P_1, P_2), \vec{\delta}(P_2, P_1)\}$, with

$$\vec{\delta}(P_1, P_2) := \inf_{U \in \mathcal{RH}_\infty} \left\| \begin{bmatrix} N_1 \\ D_1 \end{bmatrix} - \begin{bmatrix} N_2 \\ D_2 \end{bmatrix} U \right\|_\infty \tag{4}$$

where (N_1, D_1), (N_2, D_2) are normalised *rcf*'s of P_1, P_2 respectively.

Gap-metric uncertainty sets can be used in robustness issues, as formulated in the following result.

Proposition 2.1. [22] Let $\hat{P}$ be a plant model that is stabilised by the controller C, and consider the following two classes of systems:

$$\mathcal{P}_{gap}(\hat{P}, \gamma) := \{P \mid \delta(P, \hat{P}) \leq \gamma\} \tag{5}$$

$$\mathcal{P}_{dgap}(\hat{P}, \gamma) := \{P \mid \vec{\delta}(P, \hat{P}) \leq \gamma\} \tag{6}$$

Then, for either of the two classes of systems, the result holds that a controller C will stabilise all elements if and only if $\|\mathrm{T}(\hat{\mathrm{P}}, \mathrm{C})\|_\infty < \gamma^{-1}$. □

This result shows that when we have access to normalised coprime factors of a plant model, together with an error bound on these (estimated) factors (in the form of error bounds on their mismatches Δ_N and Δ_D), then immediate results follow for the robust stability of the plant.

On one hand, this result may not seem to be too striking, since a similar situation can be reached by any hard-bounded uncertainty on the system's transfer function, and application of the small gain theorem. However, the ability to deal with unstable plants as well as unstable perturbations on the open-loop plant, and the interpretation of the related uncertainty description in terms of the gap-metric, are considered to be specific advantages. The latter aspect is motivated by the fact that closed-loop properties of two systems will be close whenever their distance in terms of the gap-metric is small.

The control design method of [11,12,26] is directed towards optimising this same robustness margin, as discussed above. This control design method is characterised by

$$C = \arg\min_{\tilde{C} \in \mathcal{C}} \|V_1 T(\hat{P}, \tilde{C}) V_2\|_\infty \tag{7}$$

with V_1, V_2 being user-chosen stable weighting functions and $\mathcal{C}$ an appropriate class of controllers considered. This control design is utilised in the iterative identification/control design scheme of [4,6,10].

The above robustness results motivate the identification of a model $\hat{P}$ that minimises the distance between $\hat{P}$ and P_0 in a gap-metric sense. In this respect, expression (4) shows that this can be done by constructing a model $\hat{P}$ with *rcf* $(\hat{N}, \hat{D})$ where the coprime factors are an accurate approximation (in the $\mathcal{H}_\infty$ sense of (4)) of normalised coprime factors of the plant P_0. This motivates the approximate identification of normalised coprime plant factors.

3. Closed-loop Identification of Coprime Factorisations

3.1. Closed-loop Identification

The closed-loop identification problem is not straightforwardly solvable in the prediction error framework in the case that one is not sure that exact models of the plant and its disturbances can be obtained in the form of a consistent estimate of P_0 and H_0. Even in this case, results are mostly restricted to the situation of a stable plant P_0 [27]. What we would like to find – based on signal measurements – is a model $\hat{P}$ of a possibly unstable plant P_0 such that there exists an explicit approximation criterion $J(P_0, \hat{P})$ indicating the way in which P_0 has been approximated (at least asymptotically in the number of data), while $J(P_0, \hat{P})$ is independent of the unknown noise disturbance of the data.

Additionally, one would like to be able to tune this approximation criterion to get an approximation of P_0 that is desirable in view of the control design to be performed. This explicit tuning of the approximation

[1] In the exceptional case that P contains all-pass factors, (one of) the normalised coprime factors will have McMillan degree $< n_p$, see [25].

criterion is possible within the classical framework only when open-loop experiments can be performed.

Let us consider a few alternatives to deal with this closed-loop approximate identification problem, assuming the signal $r = r_1 + Cr_2$ is available from measurements[2]:

- If we know the controller C, we could do the following:

  Consider a parametrised model $P(\theta)$, $\theta \in \Theta$, and identify θ through:

  $$\varepsilon(t,\theta) = y(t) - P(\theta)[1 + CP(\theta)]^{-1} r(t) \qquad (8)$$

  by least squares minimisation of the prediction error $\varepsilon(t,\theta)$.

  This first alternative leads to a complicated parametrised model set. Moreover, for application of the asymptotic analysis of prediction error methods [27], the parameter set Θ has to be a connected subset of $\mathbb{R}^d$ and to parametrise only models that generate stable predictors $P(\theta)[1 + CP(\theta)]^{-1}$. In contrast with the open-loop situation, there will generally not exist such a parameter set Θ that covers all appropriate plant models with a specified McMillan degree.

- Identify transfer functions

  $$H_{yr} = P[1 + CP]^{-1} \quad \textit{and } H_{ur} = [1 + CP]^{-1}$$

  as black box transfer functions $\hat{H}_{yr}, \hat{H}_{ur}$, then an estimate of P can be obtained as $\hat{P} = \hat{H}_{yr}\hat{H}_{ur}^{-1}$.

  This method shows a decomposition of the problem in two parts, actually decomposing the system into two separate (high order) factors: sensitivity function and plant-times-sensitivity function. In this setting it will be hard to specify the order of the model to be identified on beforehand, as the quotient of the two estimated transfer functions $\hat{H}_{yr}$, $\hat{H}_{ur}$ will generally not cancel the common dynamics that are present in both functions. As a result the model order will become unnecessarily high.

- As a third alternative we can first identify H_{ur} as a black box transfer function $\hat{H}_{ur}$, and consecutively identify P from:

  $$\varepsilon(t,\theta) = y(t) - P(\theta)\hat{u}_r(t) \quad \text{with } \hat{u}_r(t) := \hat{H}_{ur} r(t).$$

  This method is presented in [20]. It also uses a decomposition of the plant P in two factors as in the previous method, now requiring a very accurate estimate of H_{ur} in the first step. An explicit approximation criterion can be formulated.

If, as in the last two methods, the plant is represented as a quotient of two factors of which estimates can be obtained from data, it is advantageous to let these factors have the minimal order, thus avoiding the problem that the resulting plant model has an excessive order, caused by non-cancelling terms with redundant dynamics. This will be discussed in the next subsection.

3.2. A Generalised Framework

We will now present a generalised framework for the identification of coprime plant factors from closed loop data, allowing the situation to identify unstable models for unstable plants. It will be shown to have close connections to the Youla-parametrisation, as employed in the identification schemes as proposed in [1,4,19,18].

Consider the notation[3]

$$S_0(z) = (I + C(z)P_0(z))^{-1} \quad \text{and} \qquad (9)$$

$$W_0(z) = (I + P_0(z)C(z))^{-1}. \qquad (10)$$

Then the system's equations can be written as[4]

$$y(t) = P_0(q)S_0(q)r(t) + W_0(q)H_0(q)e_0(t) \qquad (11)$$

$$u(t) = S_0(q)r(t) - C(q)W_0(q)H_0(q)e_0(t) \qquad (12)$$

Note also that

$$r(t) = r_1(t) + C(q)r_2(t) = u(t) + C(q)y(t) \qquad (13)$$

Using knowledge of $C(q)$, together with measurements of u and y, one can simply 'reconstruct' the reference signal r in (13). So, instead of a measurable signal r, we can equally well deal with the situation that y, u are measurable and C is known.

It can easily be verified from (11) and (12) that the signal $\{u(t) + C(q)y(t)\}$ is uncorrelated with $\{e_0(t)\}$ provided that r is uncorrelated with e_0. This shows with Eqs (11) and (12) that the identification problem of identifying the transfer function from signal r to $col(y,u)$ is an 'open loop'-type of identification problem, since r is uncorrelated with the noise terms dependent on e_0. The two transfer functions H_{ur} (from r to u) and H_{yr} (from r to y) can now act as a factorisation of the open-loop plant P_0, by considering that $P_0 = H_{yr}H_{ur}^{-1}$. The corresponding factorisation of P_0 that is accessible from closed

[2]Similar results follow if either r_1 or r_2 are available from measurements.

[3]The main part of the paper is directed towards multivariable systems, and so we distinguish between output and input sensitivity.

[4]Note that we have employed the relations $W_0P_0 = P_0S_0$ and $S_0C = CW_0$.

loop data $\{r, y, u\}$ is the factorisation $P_0 = N_0 D_0^{-1}$ with $N_0 = H_{yr} = P_0 S_0$ and $D_0 = H_{ur} = S_0$. This latter factorisation is also employed, in e.g., [14].

However, this is only one of the many factorisations that are accessible from closed-loop data. By introducing an auxiliary signal

$$x(t) := F(q)r(t) = F(q)(u(t) + C(q)y(t)) \tag{14}$$

with $F(z)$ a fixed stable rational transfer function, we can rewrite the system's relations (11) and (12) as

$$\begin{aligned} y(t) =& P_0(q)S_0(q)F(q)^{-1}x(t) \\ &+ W_0(q)H_0(q)e_0(t) \end{aligned} \tag{15}$$

$$\begin{aligned} u(t) =& S_0(q)F(q)^{-1}x(t) \\ &- C(q)W_0(q)H_0(q)e_0(t), \end{aligned} \tag{16}$$

and thus we have obtained another factorisation of P_0 in terms of $P_0 = N_{0,F}D_{0,F}^{-1}$ with

$$N_{0,F} = P_0 S_0 F^{-1} \tag{17}$$

$$D_{0,F} = S_0 F^{-1}. \tag{18}$$

Since the signal x can be reconstructed from closed-loop measurement data, these factors can also be identified from data, as they occur as transfer functions between the measured signals $\{x, y, u\}$. For appropriate identification of these factors in a prediction-error framework, they are required to be stable.

We will now characterise the freedom that is present in choosing this filter F.

Proposition 3.1. Consider a data generating system according to (11), (12) such that C stabilises P_0, and let $F(z)$ be a rational transfer function defining

$$x(t) = F(q)(u(t) + C(q)y(t)). \tag{19}$$

Let the controller C have a left coprime factorisation $(\tilde{D}_c, \tilde{N}_c)$. Then the following two expressions are equivalent:

a. the mappings $col(y, u) \to x$ and $x \to col(y, u)$ are stable;
b. $F(z) = W\tilde{D}_c$ with W any stable and stably invertible rational transfer function. □

The proof of this Proposition is added in the appendix.

Note that stability of the mappings mentioned under (a) is required in order to guarantee that a bounded signal x is obtained as an input in our identification procedure, and that the factors to be estimated are stable, so we are able to apply the standard (open-loop) prediction error methods and analysis thereof.

Note also that all factorisations of P_0 that are induced by these different choices of F reflect factorisations of which the stable factors can be identified from input/output data (cf. eqs (15), (16)).

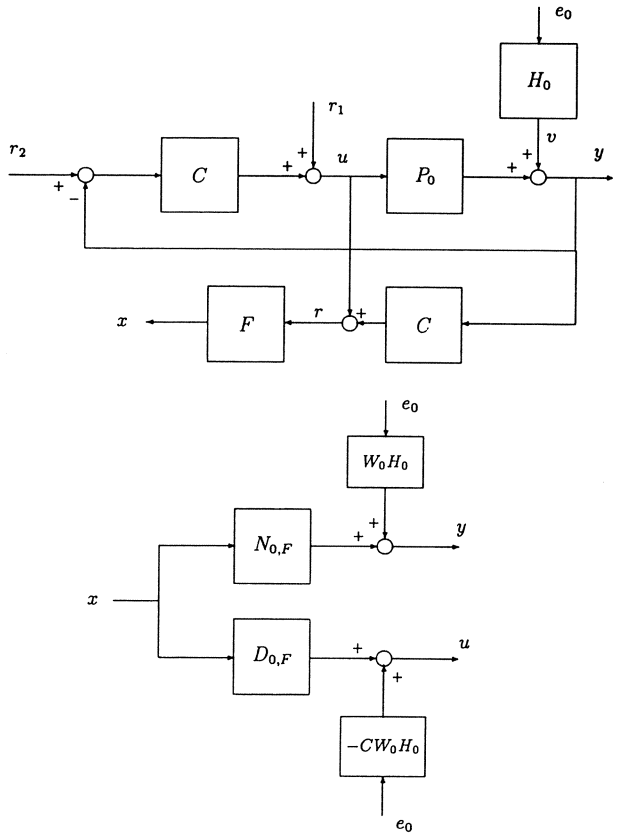

Fig. 2. Identification of coprime factors from closed-loop data.

The construction of the signal x is schematically depicted in Fig. 2. Here we have employed (13), which clearly shows that x is uncorrelated with e_0 provided the external signals are also uncorrelated with e_0.

For any choice of F satisfying the conditions of Proposition 3.1, the induced factorisation of P_0 is right coprime, as is shown next.

Proposition 3.2. Consider the situation of Proposition 3.1. For any choice of $F = W\tilde{D}_c$ with W stable and stably invertible, the induced factorisation of P_0, given by $(P_0 S_0 F^{-1}, S_0 F^{-1})$ is right coprime. □

Proof: Let (X, Y) be right Bezout factors of (N, D), i.e. $XN + YD = I$, and denote $[X_1\ Y_1] = W(\tilde{D}_c D + \tilde{N}_c N)[X\ Y]$. Then, by employing (A.1), it can simply be verified that X_1, Y_1 are stable and satisfy $X_1 P_0 S_0 F^{-1} + Y_1 S_0 F^{-1} = I$. □

By appropriate tuning of the filter F we can now influence the specific coprime factorisation $P_0 = N_{0,F}D_{0,F}^{-1}$ that is accessible from closed-loop experimental data.

However, before we start the discussion about the specific choice of F, we present an alternative formulation for the freedom that is present in this choice of F, as formulated in the following proposition.

Proposition 3.3. The filter F yields stable mappings $(y,u) \to x$ and $x \to (y,u)$ if and only if there exists an auxiliary system P_x with rcf (N_x, D_x), stabilised by C, such that $F = (D_x + CN_x)^{-1}$. For all such F the induced factorisation $P_0 = N_{0,F}D_{0,F}^{-1}$ is right coprime. □

Proof: Consider the situation of Proposition 3.1. It will be shown that for any C with *lcf* $\tilde{D}_c^{-1}\tilde{N}_c$ and any stable and stably invertible W there always exists a system P_x with *rcf* $N_xD_x^{-1}$, being stabilised by C, such that $W = [\tilde{D}_cD_x + \tilde{N}_cN_x]^{-1}$.

Take a system P_a with *rcf* $N_aD_a^{-1}$ that is stabilised by C. With Lemma A.1 it follows that $\tilde{D}_cD_a + \tilde{N}_cN_a = \Lambda$ with Λ stable and stably invertible. Then choosing $D_x = D_a\Lambda^{-1}W^{-1}$ and $N_x = N_a\Lambda^{-1}W^{-1}$ delivers the desired *rcf* of a system P_x as mentioned above. Since $F = W\tilde{D}_c$ and substituting $W = [\tilde{D}_cD_x + \tilde{N}_cN_x]^{-1}$ it follows that $F = [D_x + CN_x]^{-1}$. □

Employing this specific characterisation of F, the coprime plant factors that are accessible from closed loop data are determined by

$$\begin{bmatrix} N_{0,F} \\ D_{0,F} \end{bmatrix} = \begin{bmatrix} P_0(I+CP_0)^{-1}F^{-1} \\ (I+CP_0)^{-1}F^{-1} \end{bmatrix} \tag{20}$$

$$\text{with } F^{-1} = (I+CP_x)D_x \tag{21}$$

with $P_x = N_xD_x^{-1}$ any auxiliary plant that is stabilised by C. The auxiliary system P_x and its coprime factorisation can act as a design variable that can be chosen to tune the specific coprime factorisation that is accessible from closed-loop data. It has been shown that the open-loop dynamics of the plant can be accessed by identification of two coprime factors $N_{0,F}$, $D_{0,F}$ (20). These two transfer functions can be identified using standard open-loop identification techniques, as the input signals related to these factors are uncorrelated with the output noise disturbances (see Fig. 2). One of the problems in the identification of $N_{0,F}$, $D_{0,F}$ (20) is that there can be considerable redundant dynamics in the two factors, that cancel in the quotient $P_0 = N_{0,F}D_{0,F}^{-1}$. This is clearly visible in (20). Consequently the two separate factors generally will have a McMillan degree that is higher than the McMillan degree of P_0. In identification terms this leads to the identification of models with a McMillan degree that is larger than necessary, and thus to the identification of a too-high number of parameters. As there is a freedom in choosing the filter F according to (21), this filter can be constructed so as to reduce (or even eliminate) the effect of redundant dynamics. When F is chosen such that the factorisation $(N_{0,F}, D_{0,F})$ is *normalised*, the McMillan degree of both factors will be equal to the McMillan degree of their quotient, and thus a complete elimination of redundant dynamics will be achieved. This mechanism will be further elaborated in the next section.

The representation of P_0 in terms of the coprime factorisation above shows great resemblance with the dual Youla-parametrisation [1,18,19], i.e. the parametrisation of all plants that are stabilised by a given controller. This will be illustrated briefly.

Proposition 3.4. Let C be a controller with rcf (N_c, D_c), and let P_x with rcf (N_x, D_x) be any system that is stabilised by C. Then

(a) A plant P_0 is stabilised by C if and only if there exists an $R \in \mathcal{RH}_\infty$ such that

$$P_0 = (N_x + D_cR)(D_x - N_cR)^{-1} \tag{22}$$

is a right coprime factorisation of P_0.

(b) For any such P_0, the corresponding stable transfer function R in [22] is uniquely determined by

$$R = D_c^{-1}(I+P_0C)^{-1}(P_0 - P_x)D_x. \tag{23}$$

(c) The coprime factorisation in (22) is uniquely determined by

$$N_x + D_cR = P_0(I+CP_0)^{-1}(I+CP_x)D_x \tag{24}$$

$$D_x - N_cR = (I+CP_0)^{-1}(I+CP_x)D_x \tag{25}$$

□

Proof: The proof of part (a), which actually reduces to the Youla-parametrisation, is given in [29].
Part (b): With (22) it follows that $P_0[D_x - N_cR] = N_x + D_cR$. This is equivalent to $[D_c + P_0N_c]R = P_0D_x - N_x$ which in turn is equivalent to $[I + P_0C]D_cR = [P_0 - P_x]D_x$ which proves the result.
Part (c): Simply substituting the expression (23) for R shows that

$$\begin{bmatrix} N_0 \\ D_0 \end{bmatrix} := \begin{bmatrix} N_x + D_c R \\ D_x - N_c R \end{bmatrix}$$
$$= \begin{bmatrix} N_x + (I + P_0 C)^{-1}(P_0 - P_x)D_x \\ D_x - C(I + P_0 C)^{-1}(P_0 - P_x)D_x \end{bmatrix}$$
$$= \begin{bmatrix} P_x + (I + P_0 C)^{-1}(P_0 - P_x) \\ I - C(I + P_0 C)^{-1}(P_0 - P_x) \end{bmatrix} D_x \tag{26}$$

which proves the result, employing the relations $C(I + P_0 C)^{-1} = (I + CP_0)^{-1}C$ and $(I + P_0 C)^{-1}P_0 = P_0(I + CP_0)^{-1}$. □

This result shows that the coprime factorisation that is used in the Youla parametrisation is exactly the same coprime factorisation that we have constructed previously, by exploiting the freedom in the prefilter F, reflected in (21).

In [1,2,18] a closed-loop identification method is discussed in which the Youla parameter R (23) is identified from experimental data. This leads to an estimated plant model $\hat{P} = \hat{N}\hat{D}^{-1}$ where, in accordance with (24), (25), $\hat{N} = N_x + D_c\hat{R}$ and $\hat{D} = D_x - N_c\hat{R}$, and where $\hat{R}$ is the estimated transfer function. The estimated model $\hat{P}$ is guaranteed to be stabilised by the present controller. This approach solves part of the parametrisation problem as present in the identification method with the tailor-made parametrisation (8). The remaining problem is that the order of the resulting plant model can not simply be 'controlled' by restricting the order of the transfer function $\hat{R}$. As a result, the model order will rise and an additional model reduction is required to obtain a low order model.

In our approach it will appear to be possible to specify *a priori* the order of the model obtained.

4. An Algorithm for the Identification of Normalised Coprime Factors

We will present an approach to identify coprime plant factors, in which the abundance of redundant dynamics in both factors has been removed. This will be done by choosing an appropriate filter F.

The procedure to be elaborated is composed of two basic steps:

1. The coprime factors $(N_{0,F}, D_{0,F})$ of (20) that are accessible from closed-loop data will be shaped in such a way that $(N_{0,F}, D_{0,F})$ becomes (almost) normalised. This is being done by an appropriate choice of the filter F which, in its turn by (21), is based on an appropriate choice of auxiliary model P_x and its coprime factorisation.
2. Two plant factors are identified using classical (open-loop) prediction error techniques, applied to the signals x as input and (y, u) as output, where the signal x is constructed as a result of the filter F determined in Step 1, according to (14).

Next, the algorithm will be worked out in more detail. A formal justification and analysis is postponed until the next section.

Step 1. A filter F has to be found such that the factorisation $(N_{0,F}, D_{0,F})$ becomes (almost) normalised. The rationale behind this step is that the factorisation $(N_{0,F}, D_{0,F})$ depends on the specific factorisation (N_x, D_x) of the auxiliary model $P_x = N_x D_x^{-1}$ used in the filter F, (see (21)). From the ideal situation, where the auxiliary model P_x satisfies $P_x = P_0$, it follows from (21) that $D_{0,F} = D_x$ and $N_{0,F} = P_0 D_x = N_x$. Consequently, the normalisation of $(N_{0,F}, D_{0,F})$ can be approached by letting P_x be an accurate (inevitably high order) approximation of the plant P_0 and factorizing P_x in a normalised *rcf* (N_x, D_x). In order to obtain such an accurate auxiliary model P_x, the following algorithm based on coprime factor estimation is considered.

To initialise the algorithm, consider an auxiliary model P_x that is internally stabilised by the known controller C. Now construct a normalised *rcf* (N_x, D_x) of the auxiliary model P_x. A procedure for constructing this normalised *rcf* can be found in [30,31]. Construct the data filter F according to Proposition 3.3:

$$F = D_x^{-1}(I + CP_x)^{-1} \tag{27}$$

and use this data filter to construct an auxiliary signal $x = F(u + Cy)$. The corresponding closed-loop system equations become

$$y(t) = N_{0,F}\, x(t) + W_0 H_0 e_o(t) \tag{28}$$
$$u(t) = D_{0,F}\, x(t) - CW_0 H_0 e_0(t) \tag{29}$$

with $N_{0,F}$, $D_{0,F}$ given by (20). After this initialisation, the algorithm reads as follows:

1.a Use the signals x and $col(y, u)$ in a (least squares) identification algorithm with an output error model structure ([27]):

$$\varepsilon(t, \theta) = \begin{pmatrix} y(t) \\ u(t) \end{pmatrix} - \begin{bmatrix} N(q, \theta) \\ D(q, \theta) \end{bmatrix} x(t) \tag{30}$$

considering $col(y, u)$ as output signal and x as input signal, and obtain a parameter estimate

$$\hat{\theta}_N = \arg\min_{\theta\in\Theta} \frac{1}{N}\sum_{t=1}^{N} \varepsilon(t,\theta)^T \varepsilon(t,\theta)$$

The factorisation $(N(q,\hat{\theta}_N), D(q,\hat{\theta}_N))$ being estimated here will be used only to update and improve the auxiliary model P_x. Therefore, identification of $N_{0,F}$, $D_{0,F}$ is done as accurately as possible through high-order modelling, e.g. by employing orthogonal basis functions in a linear regression scheme. In this respect, the new method of constructing orthogonal basis functions that contain system dynamics [32,33] has shown promising results for identification purposes [34,35]. Denote the estimated factors by $\hat{N} := N(q,\hat{\theta}_N)$ and $\hat{D} := D(q,\hat{\theta}_N)$.

1.b Compute the model $\hat{P} = \hat{N}\hat{D}^{-1}$ and update the auxiliary model simply by $P_x = \hat{P}$.

1.c Again construct a normalised *rcf* (N_x, D_x) of the auxiliary model P_x; update the data filter $F = (D_x + CN_x)^{-1}$ according to Proposition 3.3 and update the auxiliary input $x = F(u + Cy)$.

If the auxiliary model is satisfactory, the factorisation $(N_{0,F}, D_{0,F})$ will be (almost) normalised and the second step of the procedure can be invoked. Otherwise the steps 1.a to 1.c may be repeated, to improve the quality of the auxiliary model P_x.

Step 2. In the second step of the procedure, the simulated auxiliary signal $x(t)$, coming from Step 1, and the signal $col(y, u)$ are used to perform an approximate identification of the (almost) normalised factorisation $(N_{0,F}, D_{0,F})$ again using an output error structure similar to (30), where $(N(q,\theta), D(q,\theta))$ are parametrised as

$$N(\theta) = b(q^{-1},\theta) f(q^{-1},\theta)^{-1} \tag{31}$$

$$D(\theta) = a(q^{-1},\theta) f(q^{-1},\theta)^{-1} \tag{32}$$

with a, b and f (matrix) polynomials of specified degree, having coefficients that are collected in the parameter vector θ. This parametrisation, where N and D have a common right divisor, guarantees that the McMillan degree of the ultimately identified model is determined by the polynomial matrices b and a only.

The parameter estimate is obtained by

$$\hat{\theta}_N = \arg\min_{\theta} \frac{1}{N}\sum_{t=1}^{N} \varepsilon_f^T(t,\theta)\varepsilon_f(t,\theta) \tag{33}$$

with $\varepsilon_f = L\varepsilon$, and L a square stable filter of appropriate dimension, decomposed as $L = diag(L_y, L_u)$.

The result of the procedure proposed above is composed of a (possibly low order) approximation $(N(q,\hat{\theta}_N), D(q,\hat{\theta}_N))$ of an (almost) normalised right coprime factorisation $(N_{0,F}, D_{0,F})$ of the plant P_0, and a resulting model $P(q,\hat{\theta}_N) = N(q,\hat{\theta}_N)D^{-1}(q,\hat{\theta}_N)$. It should be noted that the coprime factorisations $(N_{0,F}, D_{0,F})$ that can be accessed in this procedure can be made to be exactly normalised only in the situation that we have exact knowledge of the plant P_0. In the procedure presented above, this exact knowledge of P_0 has been replaced by a (very) high order accurate estimate P_x of P_0 that is obtained in the first step of the procedure. This makes this first step similar in spirit to the first step in the two-stage identification procedure in [20].

The more accurate is this auxiliary model P_x, the more common dynamics is cancelled in the coprime factors (20), and consequently the easier the factorisation $(N_{0,F}, D_{0,F})$ can be accurately described by a model of limited order. This highly motivates the usage of an iterative repetition of steps 1.a to 1.c in the algorithm presented above. Such an iterative procedure has also been applied in the application example discussed in section 6.

5. Analysis of the Algorithm

In order to write down explicitly the asymptotic identification criterion that has been used in the final step of the algorithm, we write the related prediction error as

$$\varepsilon(t,\theta) = \begin{bmatrix} L_y & 0 \\ 0 & L_u \end{bmatrix} \left\{ \begin{bmatrix} y(t) \\ u(t) \end{bmatrix} - \begin{bmatrix} N(\theta) \\ D(\theta) \end{bmatrix} x(t) \right\} \tag{34}$$

$$= \begin{bmatrix} L_y & 0 \\ 0 & L_u \end{bmatrix} \left\{ \begin{bmatrix} N_{0,F} - N(\theta) \\ D_{0,F} - D(\theta) \end{bmatrix} x(t) + \begin{bmatrix} W_0 H_0 \\ -CW_0 H_0 \end{bmatrix} e_0(t) \right\} \tag{35}$$

with $N_{0,F}$, $D_{0,F}$ given by (20). As a result the asymptotic parameter estimate $\theta^* = \text{plim}_{N\to\infty}\hat{\theta}_N$ is characterised by

$$\theta^* = \arg\min_{\theta} \int_{-\pi}^{\pi} \Big[|N_{0,F}(e^{i\omega}) - N(e^{i\omega},\theta)|^2 \Big| L_y(e^{i\omega})|^2 + |D_{0,F}(e^{i\omega}) - D(e^{i\omega},\theta)|^2 |L_u(e^{i\omega})|^2 \Big] \cdot \Phi_x(\omega) d\omega$$

with $x(t) = D_x^{-1}(I + CP_x)^{-1}[u(t) + C(q)y(t)]$.

We will write this expression as

$$\theta^* = \arg\min_{\theta} \left\| \begin{bmatrix} L_y[N_{0,F} - N(\theta)] \\ L_u[D_{0,F} - D(\theta)] \end{bmatrix} H_x \right\|_2 \tag{37}$$

where H_x is the monic stable spectral factor of Φ_x, and $N_{0,F}$, $D_{0,F}$ the specific factorisation of the plant that is obtained by (20).

Note the close relationship between the minimisation in (37) and the directed gap-metric (4) if, indeed, an $\mathcal{H}_\infty$-norm would have been used during the identification.

We will now write this identification criterion in terms of (exact) normalised coprime factors of the considered plant.

Proposition 5.1. Consider the specific plant factors $N_{0,F}, D_{0,F}$ given by (20) to be identified from data as in Step 2 of the algorithm presented before, employing an auxiliary system $P_x = N_x D_x^{-1}$ stabilised by C, with N_x, D_x a normalised rcf.

Using an output error model structure to identify $N_{0,F}, D_{0,F}$, as denoted in (30) with a least squares identification criterion (33), the asymptotic parameter estimate θ^* will satisfy

$$\theta^* = \arg\min_{\theta} \left\| \begin{bmatrix} L_y[N_n Q - N(\theta)] \\ L_u[D_n Q - D(\theta)] \end{bmatrix} H_x \right\|_2 \tag{38}$$

with N_n, D_n a normalised rcf of the plant P_0 and Q the unique monic, stable and stably invertible solution to

$$Q^*Q = R^*KR + R^*G + G^*R + I \tag{39}$$

with

$$K = D_c^* D_c + N_c^* N_c \tag{40}$$

$$G = D_c^* N_x - N_c^* D_x \tag{41}$$

Proof: Using the expressions (24), (25) for $N_{0,F}$ and $D_{0,F}$ it follows that $D_{0,F}^* D_{0,F} + N_{0,F}^* N_{0,F} = R^*KR + R^*G + G^*R + I$. Since this expression is positive real, there exists a unique Q, with $Q, Q^{-1} \in \mathcal{RH}_\infty$ and Q monic satisfying (39). As a result it follows that $(N_{0,F}Q^{-1}, D_{0,F}Q^{-1})$ is a normalised *rcf* of P_0.

If in Step 1 of the algorithm the identification of $(N_{0,F}, D_{0,F})$ is accurate enough $(\hat{P} \to P_0)$, then $P_x \to P_0$, with N_x, D_x a normalised *rcf* of P_x. As $P_x \to P_0$, applying (23) shows that $R \to 0$, and the R-dependent terms in (24), (25) will vanish in the second identification step. In terms of the matrix Q as used in the expression (38) this shows as follows:

Proposition 5.2. Consider the situation of Proposition 5.1. Then

(a) $\|Q - I\|_\infty \to 0$ *as* $\|P_x - P_0\|_\infty \to 0$.

(b) $\|Q^{-1} - I\|_\infty \to 0$ *as* $\|P_x - P_0\|_\infty \to 0$. □

Proof: Note that $\|Q^*Q - I\|_\infty = \|R^*KR + R^*G + G^*R\|_\infty$. For $\|P_x - P_0\|_\infty \to 0$ it follows with (23) that $\|R\|_\infty \to 0$ and so $\|Q^*Q - I\|_\infty \to 0$.

If $\|Q^*Q - I\|_\infty = 0$, and using the restriction that $Q, Q^{-1} \in \mathcal{RH}_\infty$ and Q monic, it implies that $Q = I$. Using continuity properties of Q as a function of R the result follows. □

Our result now shows a similar type of expression as in the original two-step method of [20], with an approximation criterion in identification (38) that becomes very nice in case $P_x = P_0$, and consequently $Q = I$, but that also shows the deviation of the desired criterion as a result of a non-perfect first step.

Finally, we will show the relation of the asymptotic identification criterion with a specific upper bound for a directed gap-metric measure, which has direct implications for robust stability properties of a controller to be designed on the basis of the identified model. For simplicity of notation and without loss of generality we will restrict attention to the situation $L_y = L_u = H_x = I$.

We take as a starting point that our identification, that has resulted in (38), provides us with an $\alpha \in \mathbb{R}$ satisfying

$$\left\| \begin{bmatrix} N_{0,F} - N(\theta^*) \\ D_{0,F} - D(\theta^*) \end{bmatrix} \right\|_\infty \leq \alpha \tag{42}$$

For the construction of this α one can apply an alternative identification procedure that provides direct expressions and sometimes even minimisation of the $\mathcal{H}_\infty$-error in (42) (see, e.g., [36–38] for an approach in a worst-case deterministic setting, and [39–41] for approaches that incorporate probabilistic aspects).

If we have this α available we can apply the following result.

Proposition 5.3. Consider the identification setup discussed before, and suppose that we have available an expression

$$\left\| \begin{bmatrix} N_{0,F} \\ D_{0,F} \end{bmatrix} - \begin{bmatrix} N(\theta^*) \\ D(\theta^*) \end{bmatrix} \right\|_\infty \leq \alpha. \tag{43}$$

Then $\vec{\delta}(P_0, P(\theta^*)) \leq \alpha \|Q^{-1}\|_\infty$ with Q defined as before. □

Proof: Combining (42) and (38) it follows that

$$\left\| \begin{bmatrix} N_n \\ D_n \end{bmatrix} Q - \begin{bmatrix} N(\theta^*) \\ D(\theta^*) \end{bmatrix} \right\|_\infty \|Q^{-1}\|_\infty \leq \alpha \|Q^{-1}\|_\infty \tag{44}$$

which leads us to

$$\left\| \begin{bmatrix} N_n \\ D_n \end{bmatrix} - \begin{bmatrix} N(\theta^*) \\ D(\theta^*) \end{bmatrix} Q^{-1} \right\|_\infty \leq \alpha \|Q^{-1}\|_\infty \tag{45}$$

Using the definition of the directed gap-metric now shows the result. □

In terms of control design, on the basis of this model that is identified, the following interesting result can now be formulated:

Proposition 5.4. Consider the control design scheme as discussed in [11,12,26], characterised by

$$C_{\hat{P}} = \arg\min_{\tilde{C} \in \mathcal{C}} \|T(\hat{P}, \tilde{C})\|_\infty \tag{46}$$

with $\hat{P} = P(\theta^*)$. If this controller satisfies

$$\|T(\hat{P}, C_{\hat{P}})\|_\infty \leq \frac{1}{\alpha \|Q^{-1}\|_\infty} \tag{47}$$

then the plant P_0 will be stabilised by $C_{\hat{P}}$. □

Proof: This follows directly, using the robust stability results for uncertainty sets in the directed gap-metric; see Proposition 2.1. □

This proposition shows that we can test *a priori* whether the designed controller will stabilise our plant, before actually implementing it. To this end we need an expression for (an upper bound on) the $\mathcal{H}_\infty$-error that is made in the identification of coprime factors, actually in both steps of the identification procedure.

Note that, in this procedure, there is no need to use a parametrisation of the model $P(\theta)$ in terms of normalised coprime factorisations. We have chosen the auxiliary system in such a way that the *plant* factors that are identified are almost normalised, and this is sufficient to obtain the given results reflecting robust stability properties.

6. Application to a Mechanical Servo System

We will illustrate the proposed identification algorithm by applying it to data obtained from experiments on the radial servo mechanism in a CD player. The radial servo mechanism uses a radial actuator which consists of a permanent magnet/coil system mounted on the radial arm, in order to position the laser spot orthogonally to the tracks

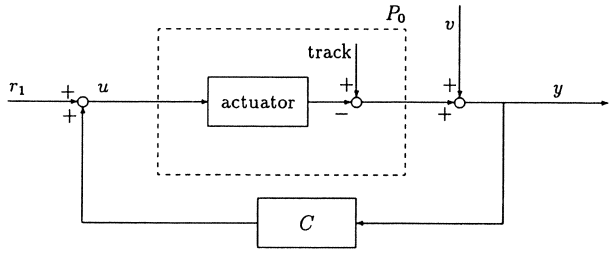

Fig. 3. Block diagram of the radial control loop in a CD player.

of the compact disc. For a more extensive description of this servo mechanism we refer to [34,35,42]. A simplified representation of the experimental setup of the radial control loop is depicted in Fig. 3, where P_0 and C denote respectively the radial actuator and the known controller. The radial servo mechanism is marginally stable, due to the presence of a double integrator in the radial actuator P_0.

This experimental setup is used to gather time sequences of 8192 points of the input $u(t)$ to the radial actuator P_0 and the disturbed track position error $y(t)$ in closed loop, while exciting the control loop by a band-limited (100Hz–10kHz) white noise signal $r_1(t)$, added to the input $u(t)$.

The results of applying the two steps of the procedure presented in Section 4 are shown in a sequence of figures. Recall from Section 4 that in the first step the aim is to find an auxiliary model P_x with a normalised *rcf* (N_x, D_x) used in the filter F, such that the factorisation $(N_{0,F}, D_{0,F})$ of P_0 becomes (almost) normalised. The result of performing Step 1 is depicted in Fig. 4. A high (thirty-second) order model P_x has

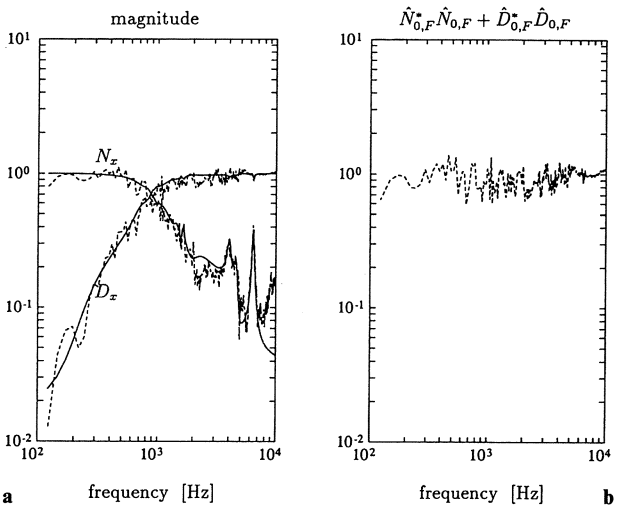

Fig. 4. Bode magnitude plots of results in Step 1 of the procedure; a: Identified 32nd-order coprime plant factors (N_x, D_x) of auxiliary model P_x (solid) and spectral estimates $(\hat{N}_{0,F}, \hat{D}_{0,F})$ of the factors $(N_{0,F}, D_{0,F})$ (dashed); b: Plot of $\hat{N}^*_{0,F}\hat{N}_{0,F} + \hat{D}^*_{0,F}, \hat{D}_{0,F}$ using the spectral estimates $\hat{N}_{0,F}$ and $\hat{D}_{0,F}$.

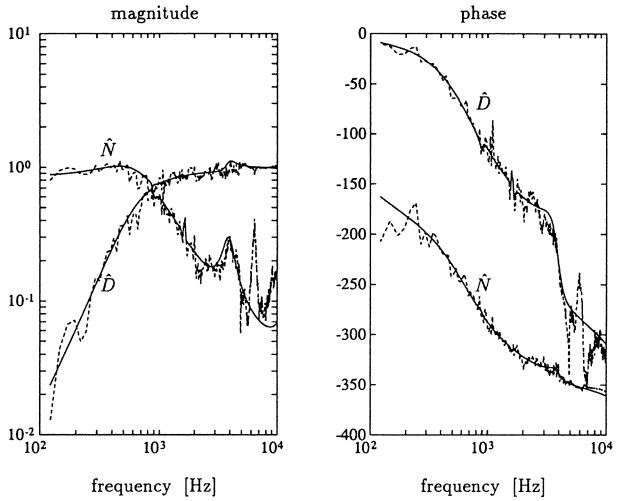

Fig. 5. Bode plot of the results in Step 2 of the procedure: identified 10th-order coprime factors $(\hat{N}, \hat{D})$ (solid) and spectral estimates $(\hat{N}_{0,F}, \hat{D}_{0,F})$ (dashed) of the factorization $(N_{0,F}, D_{0,F})$.

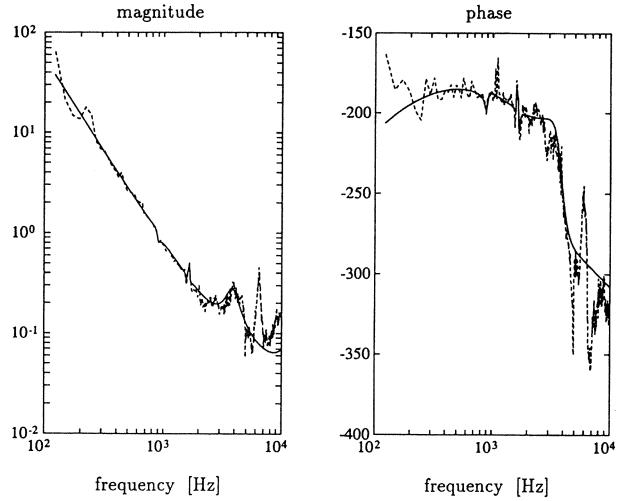

Fig. 6. Bode plot of the results in Step 2 of the procedure: identified 10th-order model $\hat{P} = \hat{N}\hat{D}^{-1}$ (solid) and spectral estimate $\hat{N}_{0,F}\hat{D}_{0,F}^{-1}$ (dashed) of the plant P_0.

been estimated and a normalised *rcf* (N_x, D_x) has been obtained. Based on this factorisation a filter F has been constructed according to (21), giving rise to a coprime factorisation of P_0 in terms of $(N_{0,F}, D_{0,F})$. The result has been obtained by running through the steps 1.a to 1.c three times. Fig. 4(a) shows an amplitude Bode plot of a spectral estimate of the factors $N_{0,F}$ and $D_{0,F}$, respectively denoted by $\hat{N}_{0,F}$ and $\hat{D}_{0,F}$, along with the factorisation N_x and D_x of the high order auxiliary model P_x. Additionally, it is verified whether the spectral estimates $(\hat{N}_{0,F}, \hat{D}_{0,F})$ are (almost) normalised. To this end the expression $\hat{N}_{0,F}^*\hat{N}_{0,F} + \hat{D}_{0,F}^*\hat{D}_{0,F}$ is plotted in Fig. 4(b). The fact that this expression is very close to unity shows that the coprime factorisation induced by the specific choice of F is (almost) normalised.

Figure 5 presents the result of a low (tenth) order identified model of the factorisation $(N_{0,F}, D_{0,F})$, which is obtained in the second step of the procedure outlined in Section 4. The amplitude and phase Bode plots are drawn of the obtained factors, along with the previously obtained spectral estimates $(\hat{N}_{0,F}, \hat{D}_{0,F})$.

Amplitude and phase Bode plots of the finally obtained tenth order model $P(\hat{\theta}_N) = N(\hat{\theta}_N)D^{-1}(\hat{\theta}_N)$ have been depicted in Fig. 6, along with the corresponding spectral estimate.

Scalar normalised *rcf*'s exhibit the property that their amplitude is bounded by 1. As a result, the integral action in the plant is necessarily represented by a small denominator factor $D_{0,F}$ for low frequencies, whereas a roll-off of P_0 for high frequencies will be represented by a roll-off of the numerator factor $N_{0,F}$. This is clearly visualised in the results. Note also that the control-relevant frequency region, i.e. the area of the cross-over frequency, is very well represented in both normalised coprime factors. As a result the dynamics that is related to this frequency region is relatively easy to be identified from these factors. Again this is a particular consequence of the fact that we identify normalised coprime factors.

Conclusions

In this paper it has been shown that it is possible to identify (almost) normalised coprime plant factors based on closed-loop experiments. A general framework is given for closed-loop identification of coprime factorisations, and it is shown that the freedom that is present in generating appropriate signals for identification can be exploited to obtain (almost) normalised coprime plant factors from closed-loop data. A resulting multi-step algorithm was presented and the corresponding asymptotic bias expression was shown to be specifically relevant for evaluating gap-metric distance measures between plant and model. The identification algorithm has been illustrated with results that are obtained from closed-loop experiments on an open-loop unstable mechanical servo system.

Acknowledgements

The authors are grateful to Douwe de Vries and Hans Dötsch for their contributions to the experimental part of the work, and to Gerrit Schootstra and Maarten Steinbuch of the Philips Research Laboratory for their help and support, and for access to the CD-player experimental setup.

References

1. Lee WS, Anderson BDO, Kosut RL. Mareels IMY. On adaptive robust control and control-relevant system identification. Proc. 1992 American Control Conf., June 26–28, 1992, Chicago, IL, 2834–2841
2. Lee WS, Anderson BDO, Kosut RL, Mareels IMY. A new approach to adaptive robust control. Int. J. Adaptive Control and Signal Proc., vol. 7, 1993, 183–211
3. Partanen AG, Bitmead RR. Two stage iterative identification/controller design and direct experimental controller refinement. Proc. 32nd IEEE Conf. Decision and Control, San Antonio, TX, 1993, 2833–2838
4. Schrama RJP. Approximate Identification and Control Design with Application to a Mechanical System. Doctoral Dissertation, Delft University of Technology, May 1992
5. Schrama RJP. Accurate models for control design: the necessity of an iterative scheme. IEEE Trans. Automat Contr., AC-37, 1992, 991–994
6. Schrama RJP, Bosgra OH. Adaptive performance enhancement by iterative identification and control design. Int. J. Adaptive Control and Sign. Proc., vol. 7, no. 5, 1993, 475–487
7. Zang Z, Bitmead RR, Gevers M. Iterative Model Refinement and Control Robustness Enhancement. Report 91.137, CESAME, Univ. Louvain-la-Neuve, November 1991. See also Proc. 30th IEEE Conf. Decision and Control, Brighton, UK, 279–284
8. Hakvoort RG, Schrama RJP, Van den Hof PMJ. Approximate identification in view of LQG feedback design. Proc. 1992 American Control Conf., 1992, 2824–2828
9. Hakvoort RG, Schrama RJP, Van den Hof PMJ. Approximate identification with closed-loop performance criterion and application to LQG feedback design. Automatica, vol. 30, no. 4, 1994, 679–690
10. Schrama RJP, Van den Hof PMJ. An iterative scheme for identification and control design based on coprime factorizations. Proc. 1992 American Control Conf., June 24–26, 1992, Chicago, IL, 2842–2846
11. Bongers PMM, Bosgra OH. Low order robust $\mathcal{H}_\infty$ controller synthesis. Proc. 29th IEEE Conf. Decision and Control, Honolulu, HI, 1990, 194–199
12. McFarlane D, Glover K. An $\mathcal{H}_\infty$ design procedure using robust stabilization of normalized coprime factors. Proc. 27th IEEE Conf. Decision and Control, Austin, TX, 1988, 1343–1348
13. Liu K. Skelton RE. Closed loop identification and iterative controller design. Proc. 29th IEEE Conf. Decision and Control, Honolulu, HI, 1990, 482–487
14. Rivera DE. Control-relevant parameter estimation: a systematic procedure for prefilter design. Proc. 1991 American Control Conf., Boston, MA, 1991, 237–241
15. Bitmead RR. Iterative control design approaches. Proc. 12th IFAC World Congress, 18–23 July 1993, Sydney, Australia, vol. 9, 381–384
16. Gevers M. Towards a joint design of identification and control? In: H.L. Trentelman and J.C. Willems (Eds), Essays on Control: Perspectives in the Theory and its Applications. Birkhäuser, Boston, 1993, 111–151
17. Van den Hof PMJ, Schrama RJP. Identification and control – closed loop issues. Prepr. IFAC Symp. System Identification, Copenhagen, Denmark, vol. 2, 1–13. To appear in Automatica, 31, No. 12, 1995
18. Hansen FR. Fractional Representation Approach to Closed-Loop System Identification and Experiment Design. Ph.D. thesis, Stanford University, Stanford, CA, 1989
19. Schrama RJP. An open-loop solution to the approximate closed-loop identification problem. Proc. 9th IFAC/IFORS Symp. Identification and System Param Estim., July 8–12, Budapest, Hungary, 1602–1607
20. Van den Hof PMJ, Schrama RJP. An indirect method for transfer function estimation from closed loop data. Automatica, Vol. 28, 1993, 1523–1527
21. Vidyasagar M. Control Systems Synthesis: A Factorization Approach. M.I.T. Press, Cambridge, MA, 1985
22. Georgiou TT, Smith MC. Optimal robustness in the gap metric. IEEE Trans. Automat. Contr., AC-35, 1990, 673–686
23. Schrama RJP, Bongers PMM. Experimental robustness analysis based on coprime factorizations. In O.H. Bosgra and P.M.J. Van den Hof (Eds), Sel. Topics in Identif., Modelling and Contr., Vol. 3. Delft Univ. Press, 1991, 1–8
24. Vidyasagar M. The graph metric for unstable plants and robustness estimates for feedback stability. IEEE Trans. Automat. Contr., AC-29, 1984, 403–417
25. Tsai MC, Geddes EJM, Postlethwaite I. Pole-zero cancellations and closed-loop properties of an $\mathcal{H}_\infty$–mixed sensitivity design problem. Automatica, 28, 1992, 519–530
26. Bongers PMM. Modelling and Identification of Flexible Wind Turbine Systems and A Factorisational Approach to Robust Control. Doctoral Dissertation, Delft Univ. Technology, June 1994
27. Ljung L. System Identification – Theory for the User. Prentice-Hall, Englewood Cliffs, NJ, 1987
28. Zhu YC, Stoorvogel AA. Closed loop identification of coprime factors. Proc. 31st IEEE Conf. Decision and Control, Tucson, AZ, 1992, 453–45428
29. Desoer CA, Liu RW, Murray J, Saeks R. Feedback system design: the fractional representation approach to analysis and synthesis. IEEE Trans. Automat. Contr., AC-25, 1980, 399–412
30. Vidyasagar M. Normalized coprime factorizations for nonstrictly proper systems. IEEE Trans. Automat. Contr., AC-33, 1988, 300–301
31. Bongers PMM, Heuberger PSC. Discrete normalized coprime factorization and fractional balanced reduction. In: Proc. 9th INRIA Conf. Analysis and Optimiz. Systems. Lecture Notes Control and Inform. Sciences, Vol. 144, 1990, Springer Verlag, 307–313
32. Heuberger PSC, Van den Hof PMJ, Bosgra OH. A generalized orthonormal basis for linear dynamical systems. IEEE Trans. Automat. Control, AC-40, 1995, 451–465
33. Van den Hof PMJ, Heuberger PSC, Bokor J. Identification with generalized orthonormal basis functions – statistical analysis and error bounds. Prepr. 10th IFAC Symp. System Identification, Copenhagen, Denmark, Vol. 3, 207–212. To appear in Automatica, 31, No. 12, 1995
34. de Callafon, RA, Van den Hof PMJ, Steinbuch M. Control relevant identification of a compact disc

pick-up mechanism. Proc. 32nd IEEE Conf. Decision and Control, San Antonio, TX, USA, 1993, 2050–2055.
35. de Callafon RA, Van den Hof PMJ, de Vries DK. Identification and control of a compact disc mechanism using fractional representations. Prepr. 10th IFAC Symp. System Identification, Copenhagen, Denmark, Vol. 2, 1994, 121–126
36. Gu G, Khargonekar PP. A class of algorithms for identification in $\mathcal{H}_\infty$. Automatica, 28, 1992, 299–312
37. Hakvoort RG. Worst-case system identification in $\mathcal{H}_\infty$: error bounds and optimal models. Prepr. 12th IFAC World Congress, Sydney, vol. 8, 1993, 161–164
38. Helmicki AJ, Jacobson CA, Nett CN. Control-oriented system identification: a worst-case/deterministic approach in $\mathcal{H}_\infty$. IEEE Trans. Autom. Control, AC-36, 1991, 1163–1176
39. de Vries DK. Identification of Model Uncertainty for Control Design. Doctoral Dissertation, Delft Univ. Technology, September 1994
40. de Vries DK, Van den Hof PMJ. Quantification of uncertainty in transfer function estimation: a mixed probalistic – worst-case approach. Automatica, 31, 1995, 543–557
41. Hakvoort RG. Identification for Robust Process Control; nominal models and error bounds. Doctoral Dissertation, Delft Univ. Technology, November 1994
42. Steinbuch M, Schootstra G, Bosgra OH. Robust control of a compact disc player. Proc. 31st IEEE Conf. Decision and Control, Tucson, AZ, 1992, 2596–2600

Appendix

Lemma A.1 [21]. Consider rational transfer functions $P_0(z)$, with rcf (N, D), and $C(z)$ with lcf $(\tilde{D}_c, \tilde{N}_c)$. Then

$T(P_0, C) = \begin{bmatrix} P_0 \\ I \end{bmatrix} (I + CP_0)^{-1}[C\ I]$ *is stable if and only if* $\tilde{D}_c D + \tilde{N}_c N$ *is stable and stably invertible.* □

Proof of Proposition 3.1.

(a) ⇒ (b). The mapping $x \rightarrow col(y, u)$ is characterised by the transfer function $\begin{bmatrix} P_0 S_0 F^{-1} \\ S_0 F^{-1} \end{bmatrix}$.

By writing $\begin{bmatrix} P_0 S_0 F^{-1} \\ S_0 F^{-1} \end{bmatrix} = P_0 I (I + CP_0)^{-1} F^{-1}$ and substituting a right coprime factorisation (N, D) for P_0, and a left coprime factorisation $(\tilde{D}_c, \tilde{N}_c)$ for C we get, after some manipulation:

$$\begin{bmatrix} P_0 S_0 F^{-1} \\ S_0 F^{-1} \end{bmatrix} = \begin{bmatrix} N \\ D \end{bmatrix} (\tilde{D}_c D + \tilde{N}_c N)^{-1} \tilde{D}_c F^{-1}. \tag{A.1}$$

Premultiplication of the latter expression with the stable transfer function $(\tilde{D}_c D + \tilde{N}_c N)[X\ Y]$ with (X, Y) right Bezout factors of (N, D) shows that $\tilde{D}_c F^{-1}$ is implied to be stable. As a result, $\tilde{D}_c F^{-1} = W$ with W any stable transfer function.

With respect to the mapping $col(y, u) \rightarrow x$, stability of F and FC implies stability of $W^{-1}[\tilde{D}_c\ \tilde{N}_c]$, which after postmultiplication with the left Bezout factors of $(\tilde{D}_c, \tilde{N}_c)$ implies that W^{-1} is stable.

This proves that $F = W^{-1}\tilde{D}_c$ with W a stable and stably invertible transfer function.

$(b) \Rightarrow (a)$. Stability of F and FC is straightforward. Stability of $S_0 F^{-1}$ and $P_0 S_0 F^{-1}$ follows from (A.1), using the fact that $(\tilde{D}_c D + \tilde{N}_c N)^{-1}$ is stable (lemma A.1). □