EINDHOVEN UNIVERSITY OF TECHNOLOGY

Data-driven modeling in linear dynamic networks

Paul M.J. Van den Hof

10th Harry Nicholson Distinguished Lecture in Control Engineering

The University of Sheffield, UK, 21 May 2019

www.sysdynet.eu
www.pvandenhof.nl
p.m.j.vandenhof@tue.nl

European Research Council

Introduction – dynamic networks

Decentralized process control

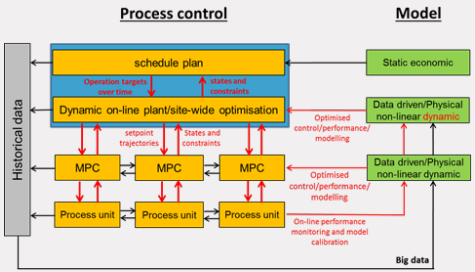

Smart power grid

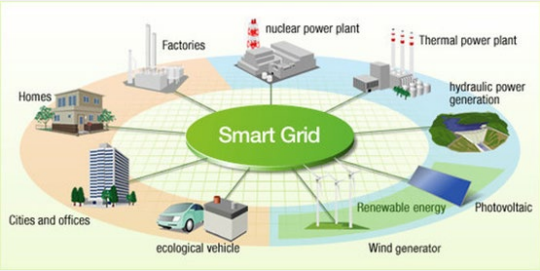

Pierre et al. (2012)

Autonomous driving

www.envidia.com

Metabolic network

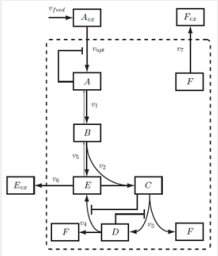

Hillen (2012)

Brain network

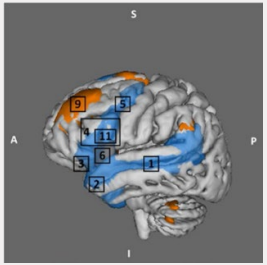

Hydrocarbon reservoirs

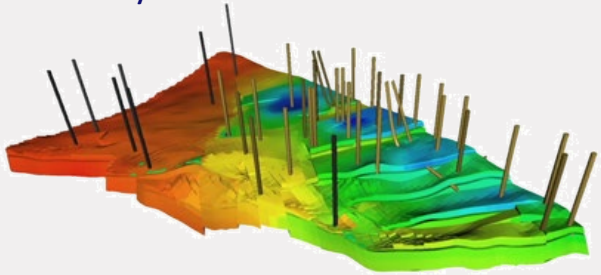

Mansoori (2014)

Introduction

Overall trend:

- (Large-scale) interconnected systems
- With hybrid dynamics (continuous / switching)
- Distributed / multi-agent type monitoring, control and optimization problems
- Data is “everywhere”, big data era
- Modelling problems will need to consider this

Introduction

Distributed / multi-agent control:

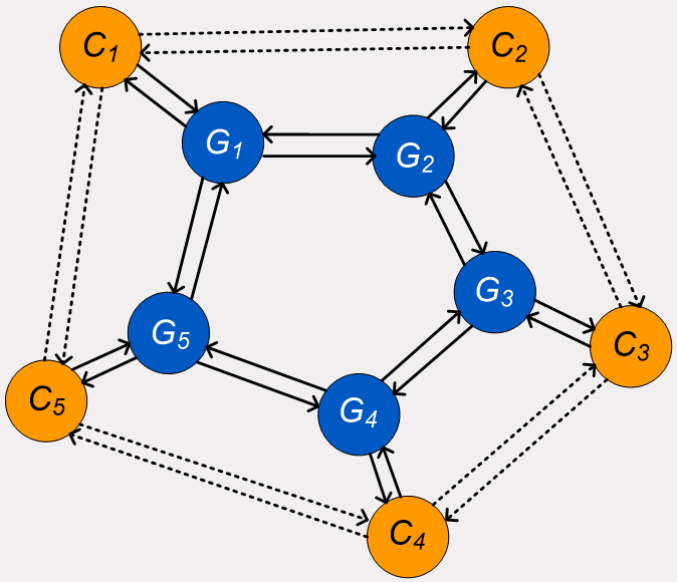

With both physical and communication links between systems G_i and controllers C_i

How to address data-driven modelling problems in such a setting?

Introduction

The classical (multivariable) identification problems[1] :

open loop

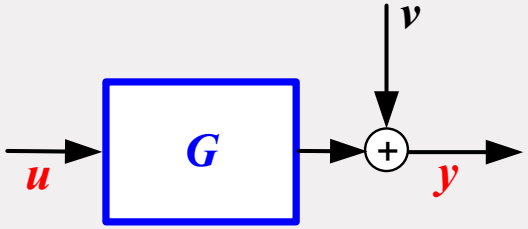

closed loop

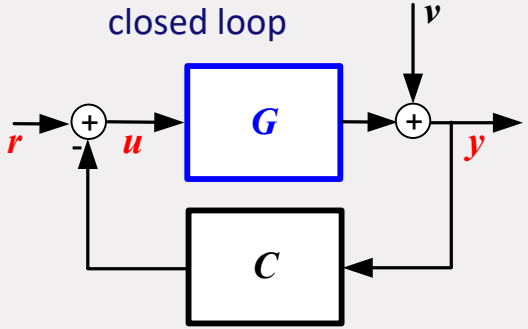

Identify a plant model $\hat{G}$ on the basis of measured signals u, y (and possibly r), focusing on *continuous LTI dynamics*.

We have to move from a simple and fixed configuration to deal with ***structure*** in the problem.

[1] Ljung (1999), Söderström and Stoica (1989), Pintelon and Schoukens (2012)

Contents

Dynamic networks for data-driven modeling

Dynamic networks

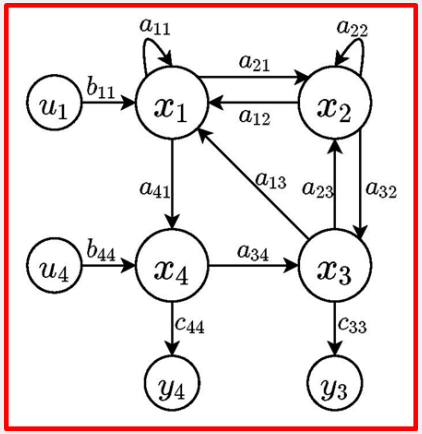

State space representations
(Goncalves, Warnick, Sandberg, Yeung, Yuan, Scherpen,…)

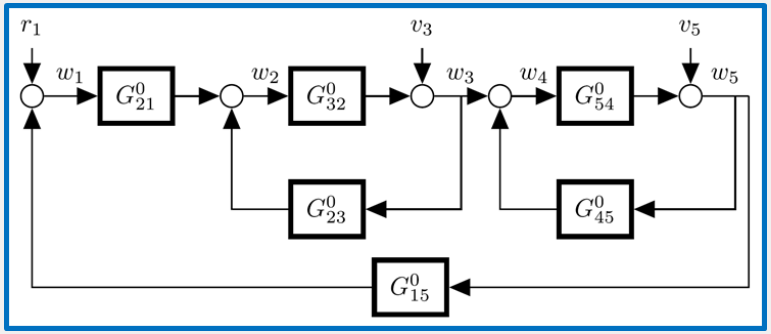

Module representation
(VdH, Dankers, Materassi, Gevers, Bazanella,…)

Dynamic network setup

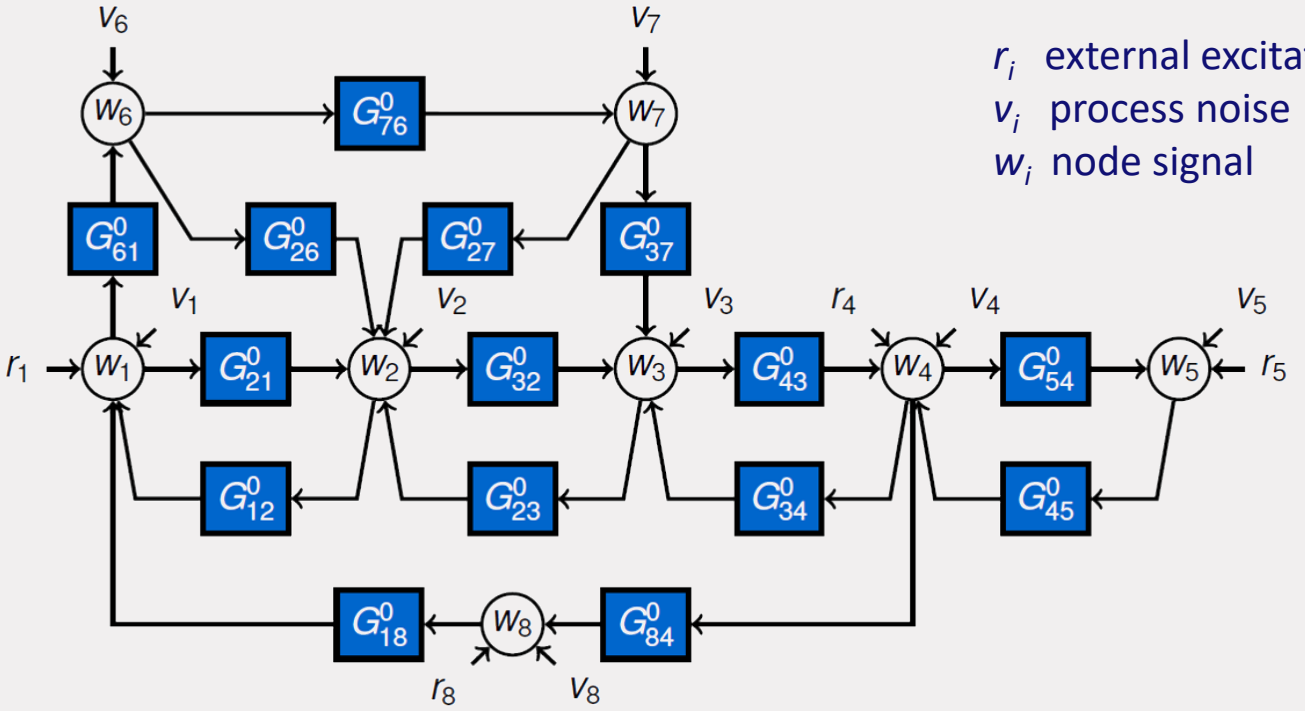

r_i external excitation
v_i process noise
w_i node signal

Dynamic network setup

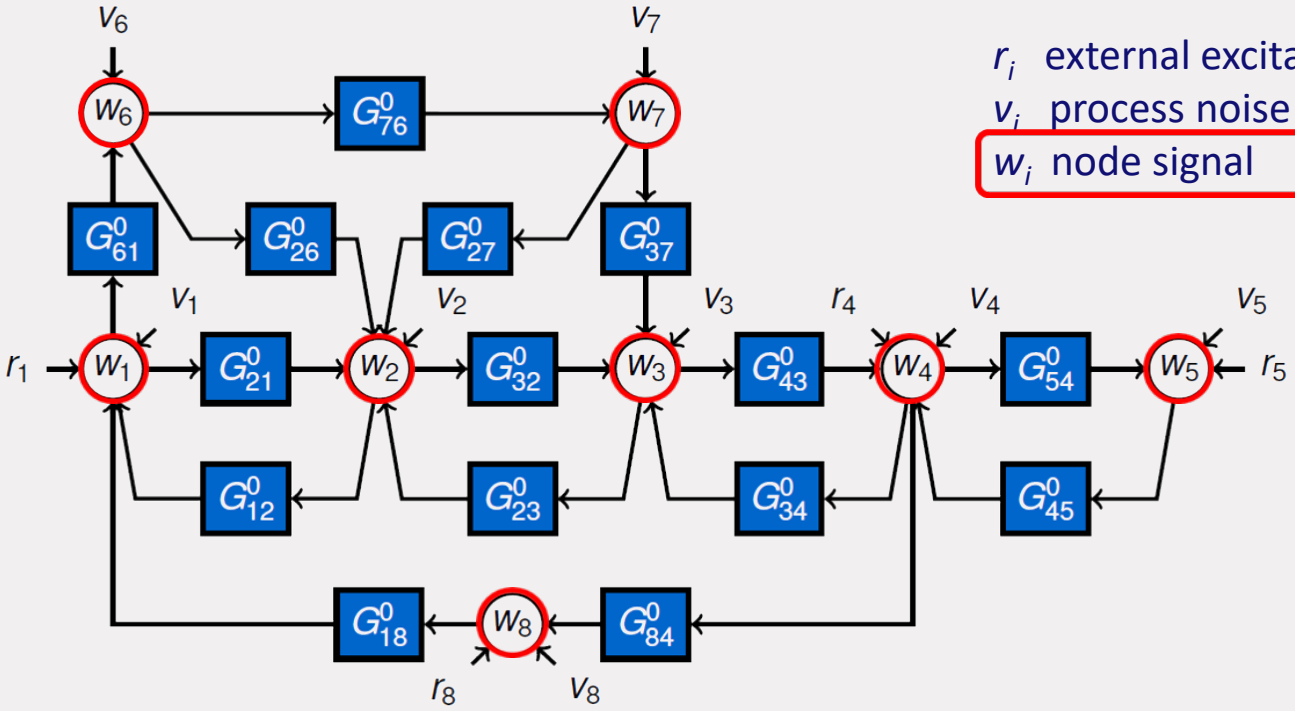

r_i external excitation

v_i process noise

w_i node signal

Dynamic network setup

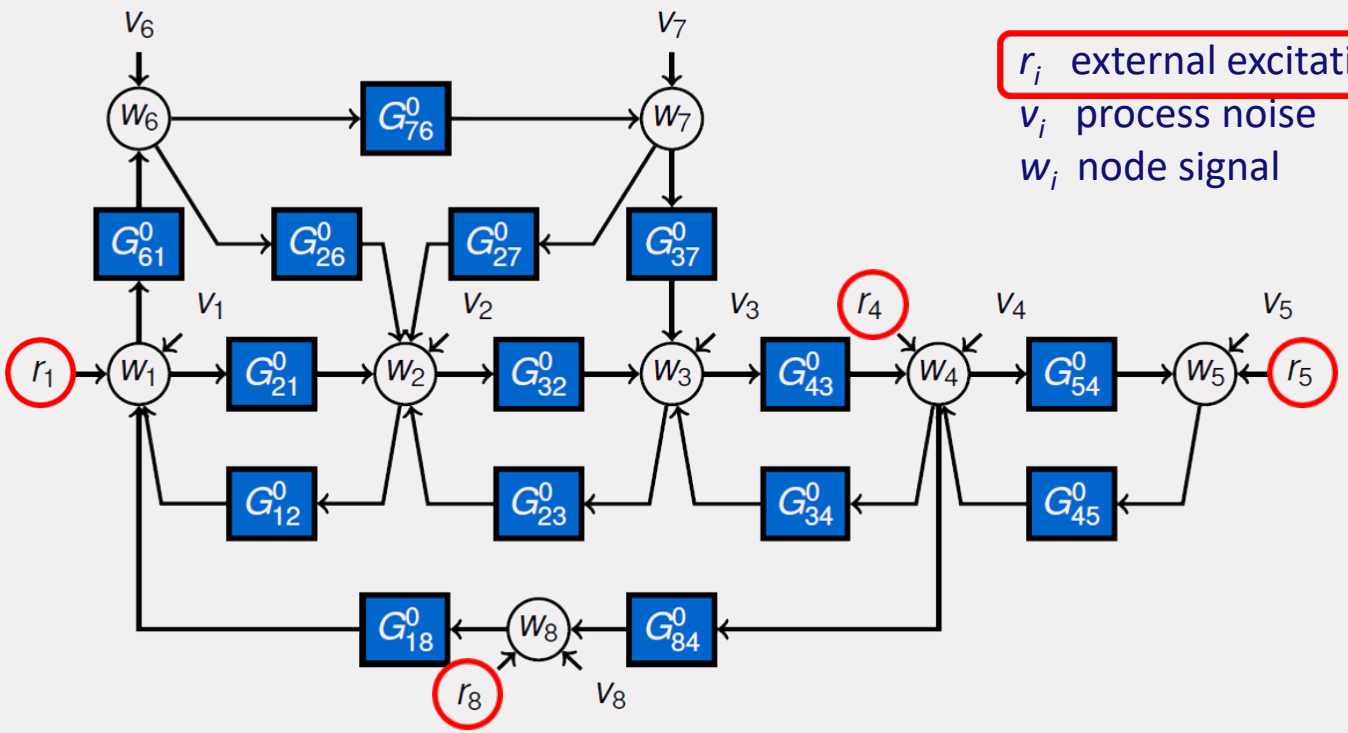

r_i external excitation

v_i process noise

w_i node signal

Dynamic network setup

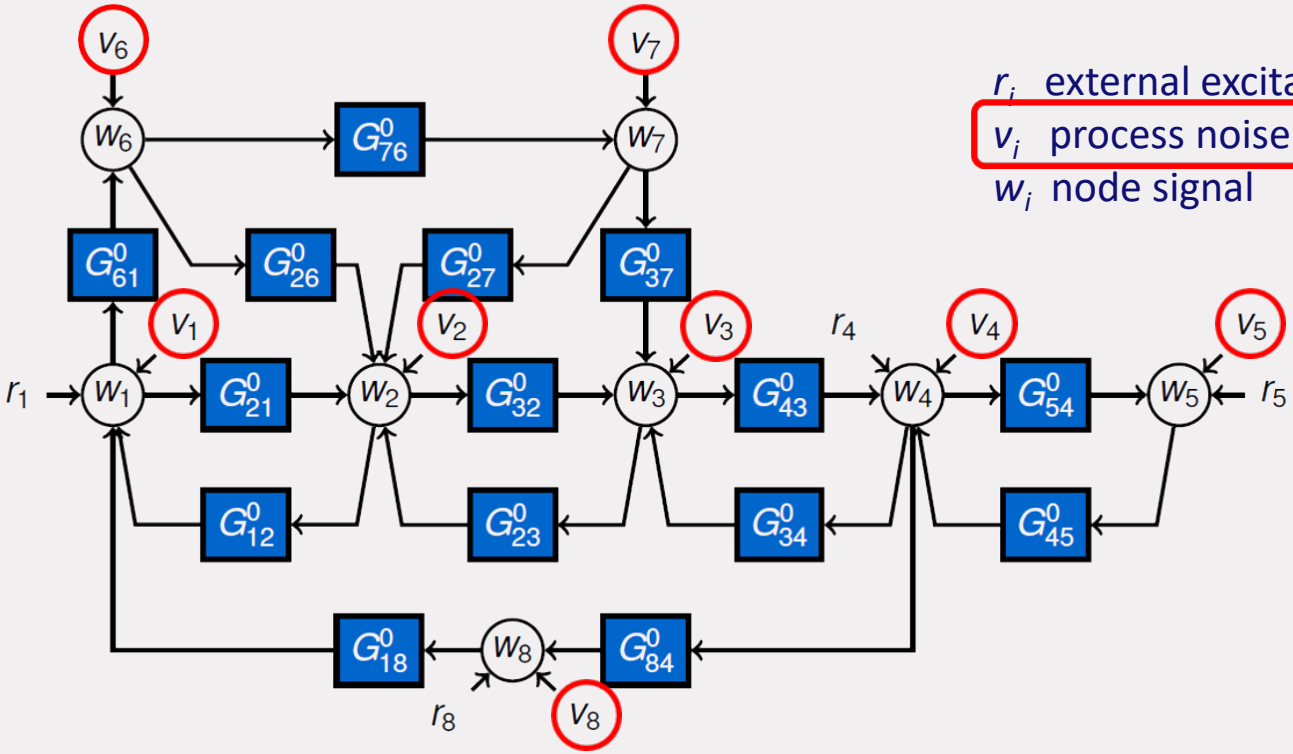

r_i external excitation

v_i process noise

w_i node signal

Dynamic network setup

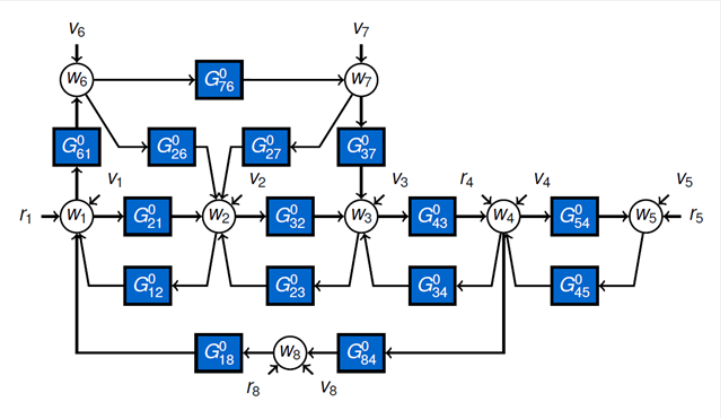

Assumptions:

- Total of L nodes
- Network is well-posed and stable
- Modules are dynamic, may be unstable
- Disturbances are stationary stochastic and can be correlated

$$\begin{bmatrix} w_1 \\ w_2 \\ \vdots \\ w_L \end{bmatrix} = \underbrace{\begin{bmatrix} 0 & G^0_{12} & \cdots & G^0_{1L} \\ G^0_{21} & 0 & \ddots & G^0_{2L} \\ \vdots & \ddots & \ddots & \vdots \\ G^0_{L1} & G^0_{L2} & \cdots & 0 \end{bmatrix}}_{G^0(q)} \begin{bmatrix} w_1 \\ w_2 \\ \vdots \\ w_L \end{bmatrix} + R^0 \begin{bmatrix} r_1 \\ r_2 \\ \vdots \\ r_K \end{bmatrix} + \begin{bmatrix} v_1 \\ v_2 \\ \vdots \\ v_L \end{bmatrix}$$

$$w(t) = G^0(q)w(t) + R^0(q)r(t) + v(t)$$

J. Gonçalves and S. Warnick, IEEE TAC, 2008.
P.M.J. Van den Hof, A.G. Dankers, P.S.C. Heuberger and X. Bombois. Automatica, 2013.

Dynamic network setup

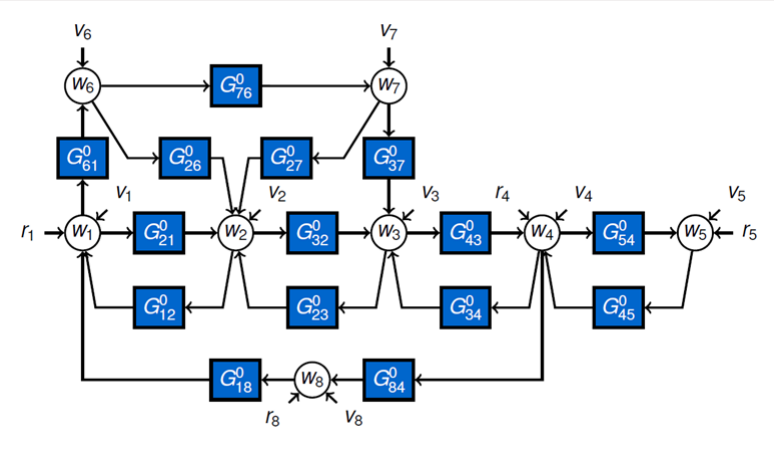

Many new identification questions can be formulated:

- Identification of a local module (known topology)
- Identification of the full network
- Topology estimation
- Identifiability
- Sensor and excitation allocation
- Fault detection
- User prior knowledge of modules
- Scalable algorithms

Contents

Single module identification - known topology

Single module identification

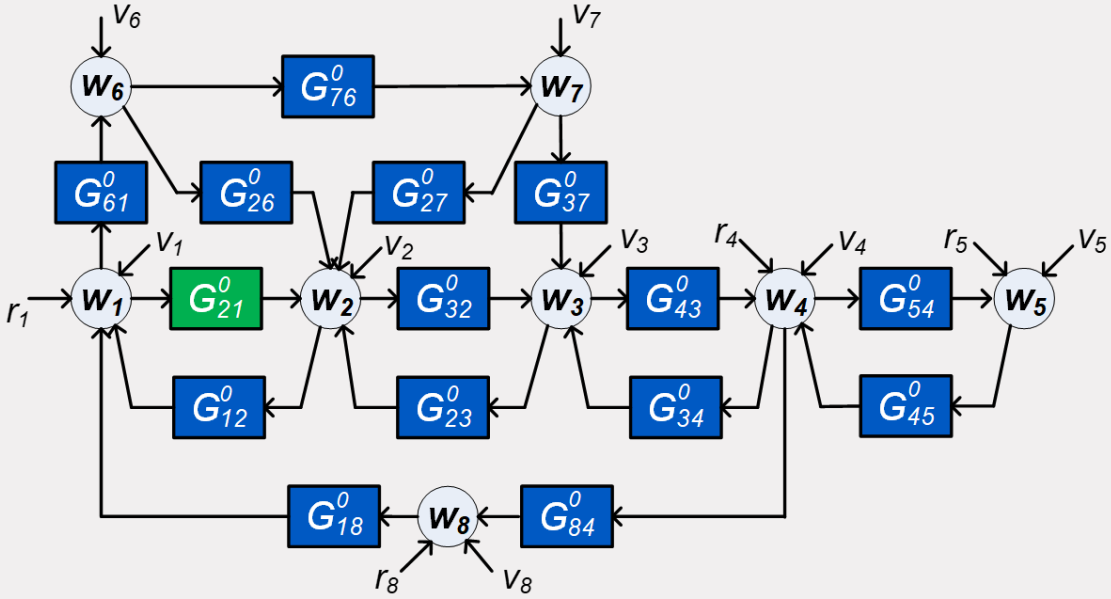

For a network with known topology:

- Identify G^0_{21} on the basis of measured signals
- Which signals to measure? Preference for local measurements

Single module identification

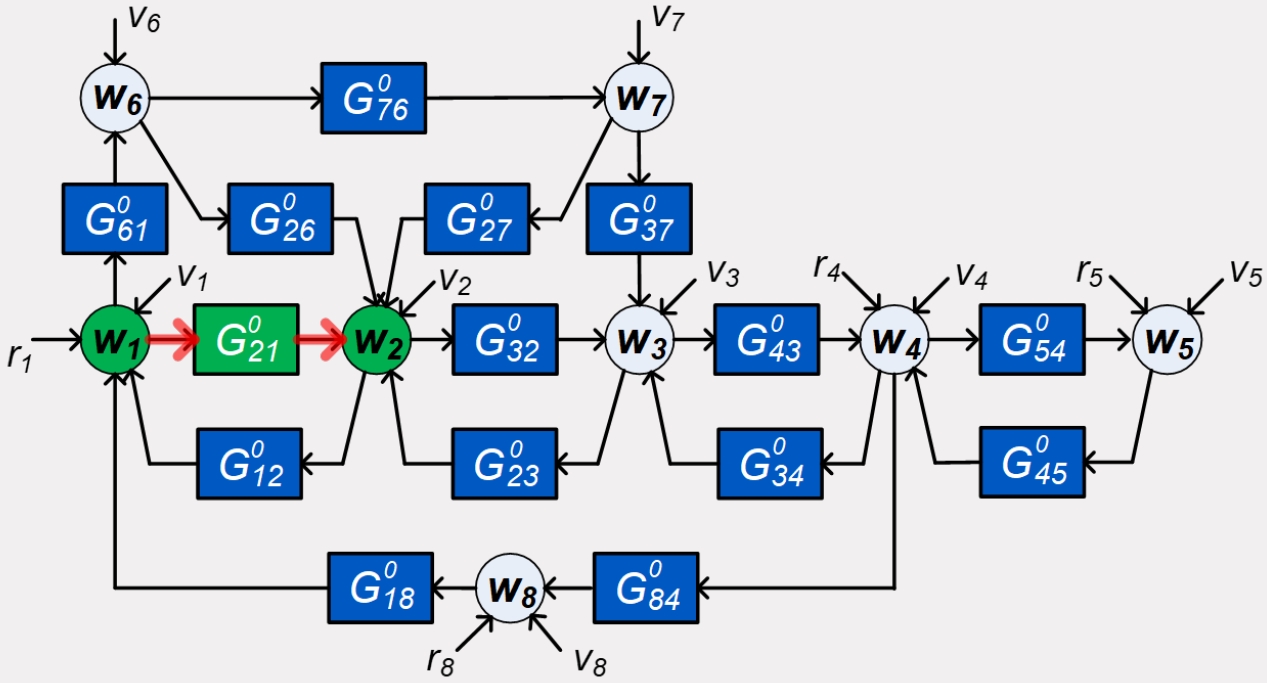

Single module identification

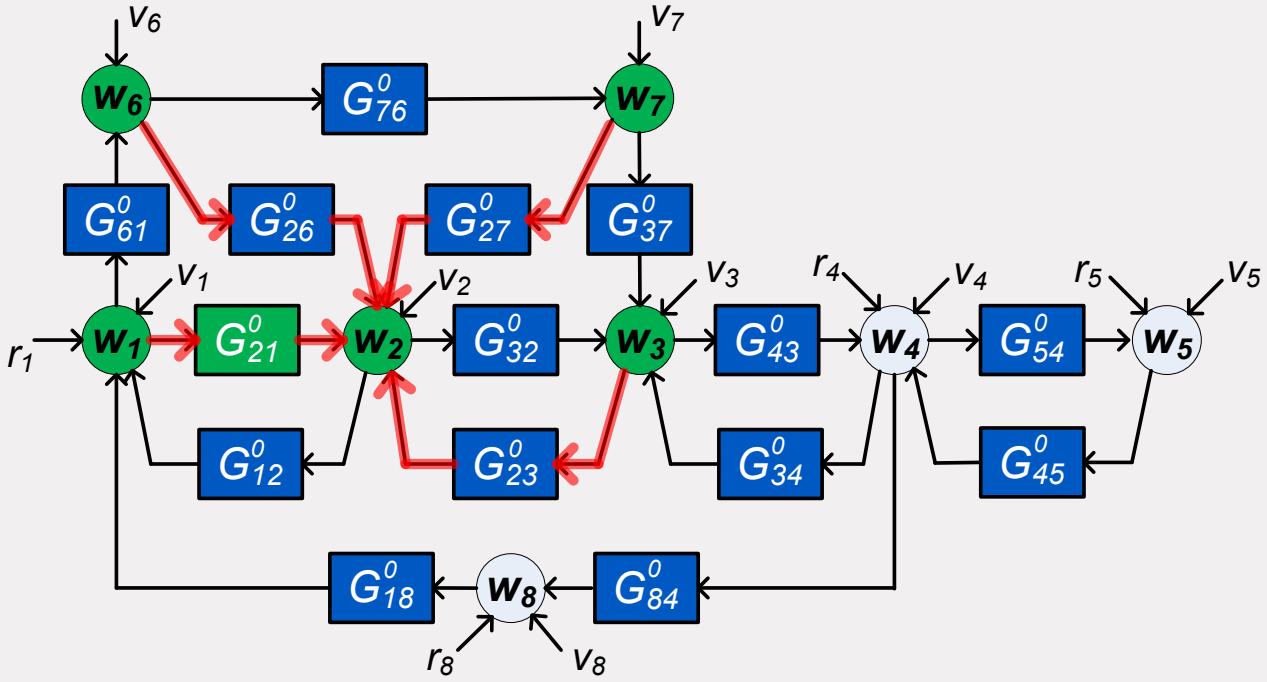

Identifiying G^0_{21} is part of a 4-input, 1-output problem

Single module identification

4 input nodes to be measured:

Can we do with less?

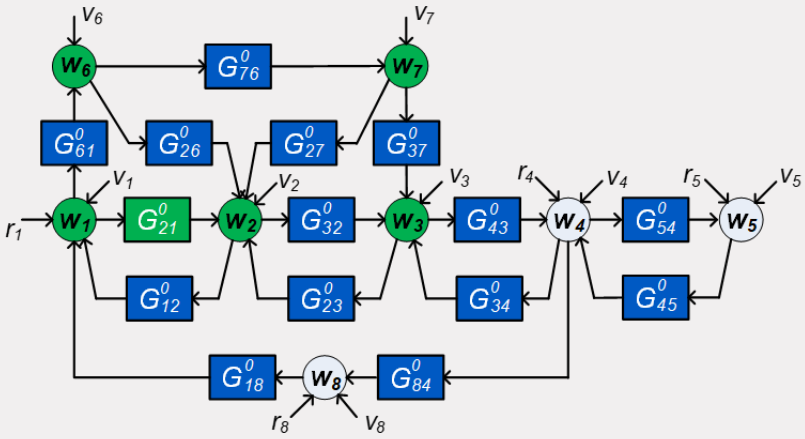

Network immersion [1]

- An **immersed network** is constructed by removing node signals, but leaving the remaining node signals invariant
- Modules and disturbance signals are adapted
- Abstraction through variable elimination (Kron reduction[2] in network theory).

[1] A. Dankers. PhD Thesis, 2014.

[2] F. Dörfler and F. Bullo, IEEE Trans. Circuits and Systems I (2013)

Immersion

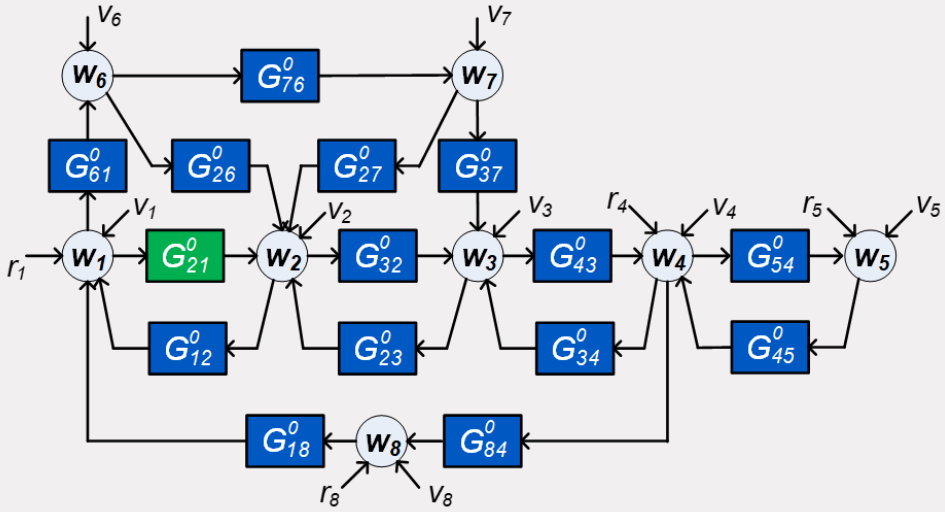
v_6
v_7
w_6
G^0_{76}
w_7
G^0_{61}
G^0_{26}
G^0_{27}
G^0_{37}
v_1
v_2
v_3
r_4
v_4
r_5
v_5
r_1
w_1
G^0_{21}
w_2
G^0_{32}
w_3
G^0_{43}
w_4
G^0_{54}
w_5
G^0_{12}
G^0_{23}
G^0_{34}
G^0_{45}
G^0_{18}
w_8
G^0_{84}
r_8
v_8

Immersion

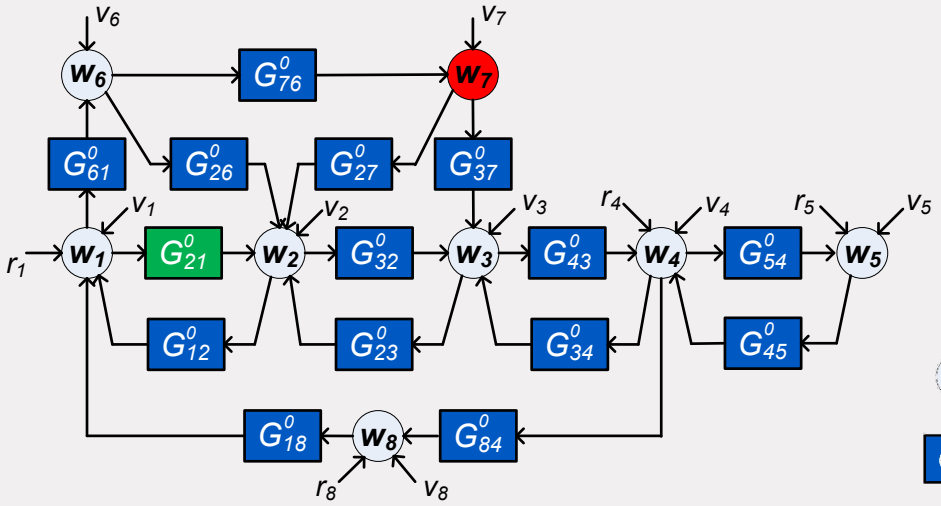

Immersing w_7

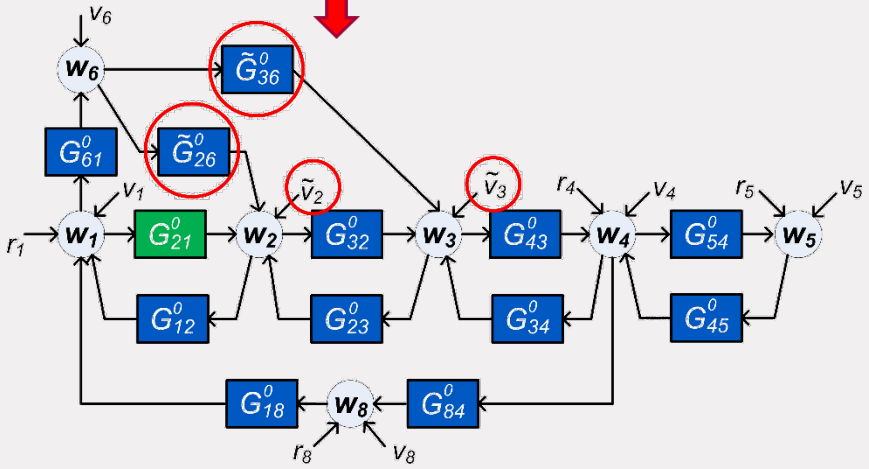

When does immersion leave G^0_{21} invariant?

Immersion

When does immersion leave G^0_{21} invariant?

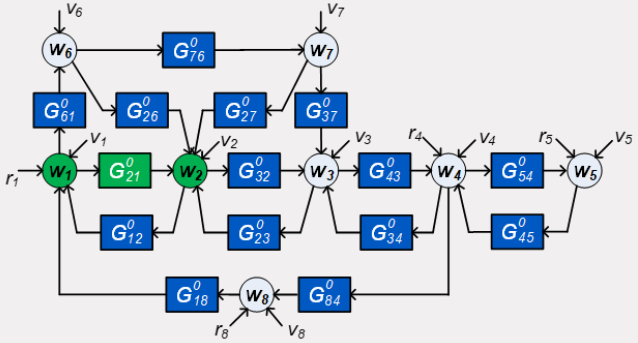

Parallel paths and loops around the output

There should be no **parallel paths** and **loops around the output** that run through removed nodes only

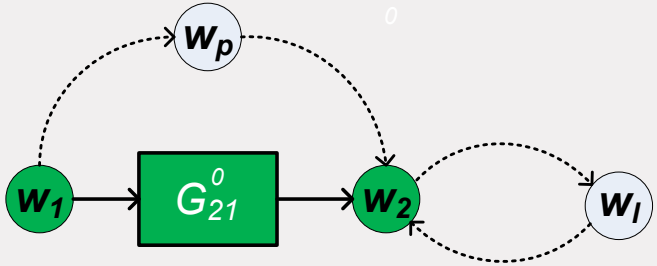

A.G. Dankers et al., *IEEE Trans. Automatic Control, 61*, 937-952, 2016.

Single module identification

parallel paths, and loops around the output

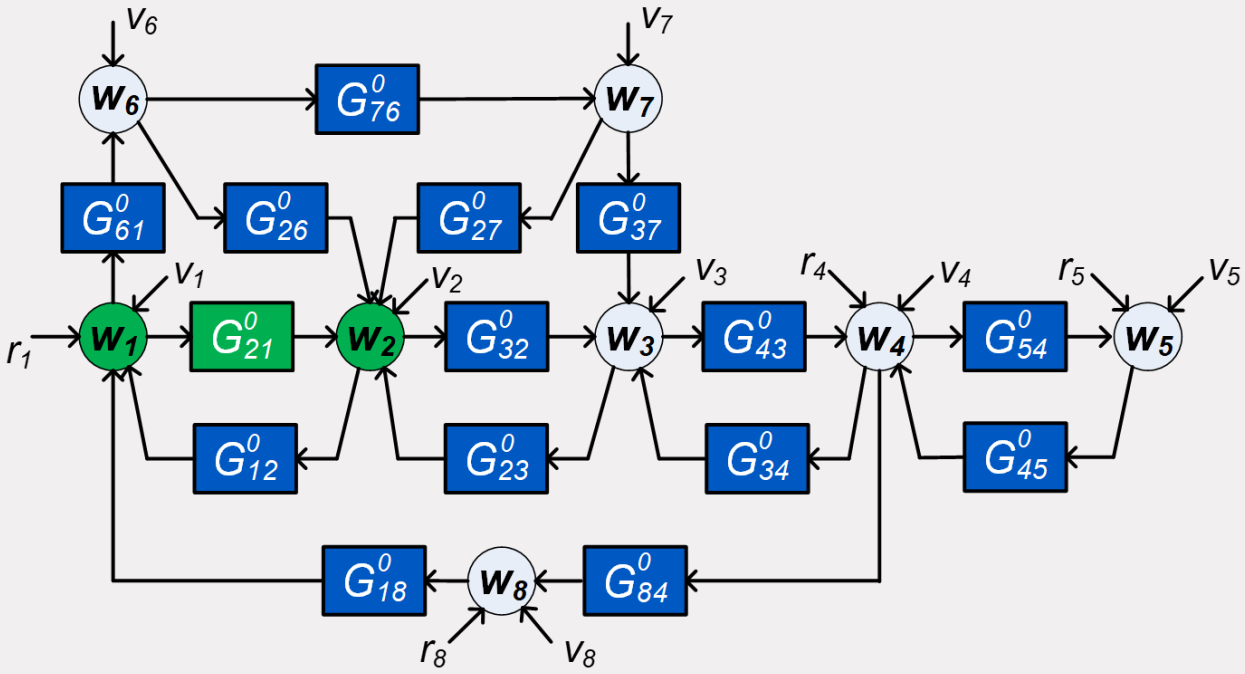

Single module identification

parallel paths, and loops around the output

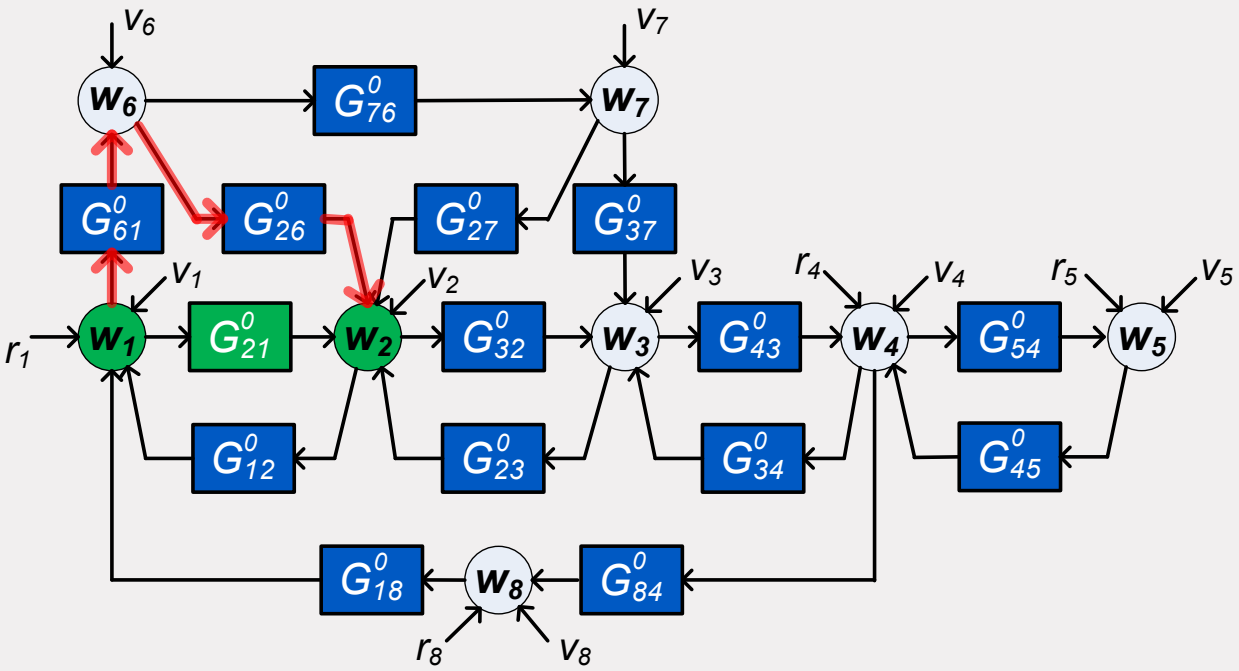

Single module identification

parallel paths, and loops around the output

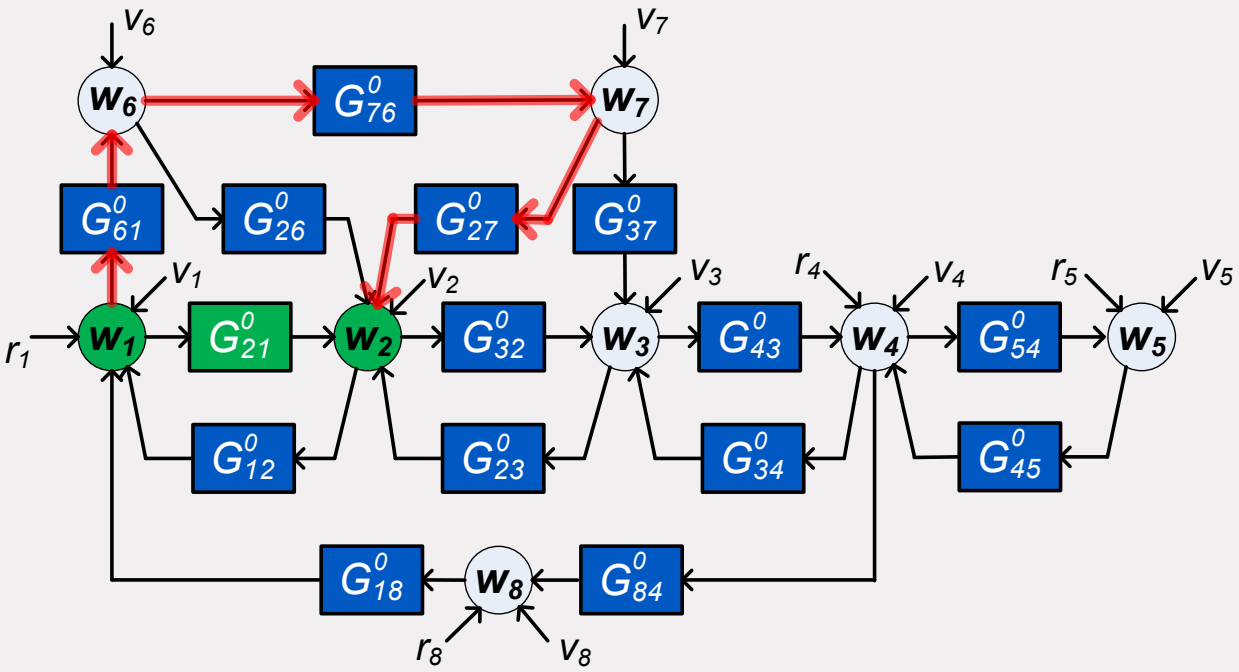

Single module identification

parallel paths, and loops around the output

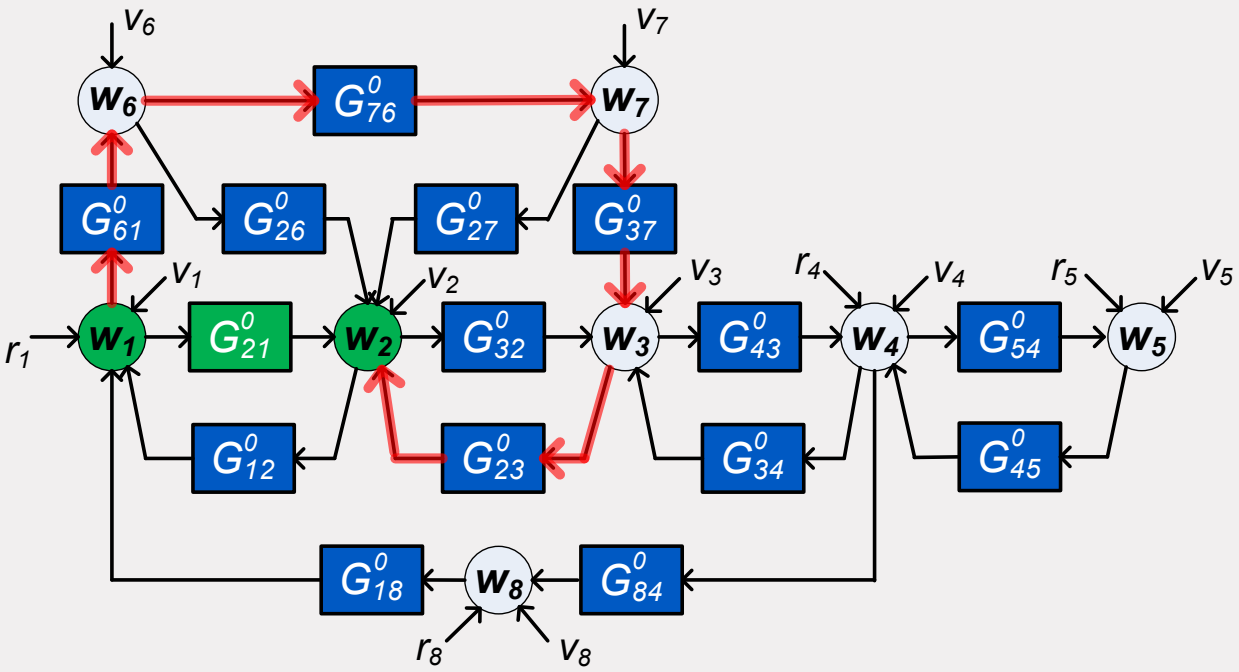

Single module identification

Choose w_6 as an additional input (to be retained)

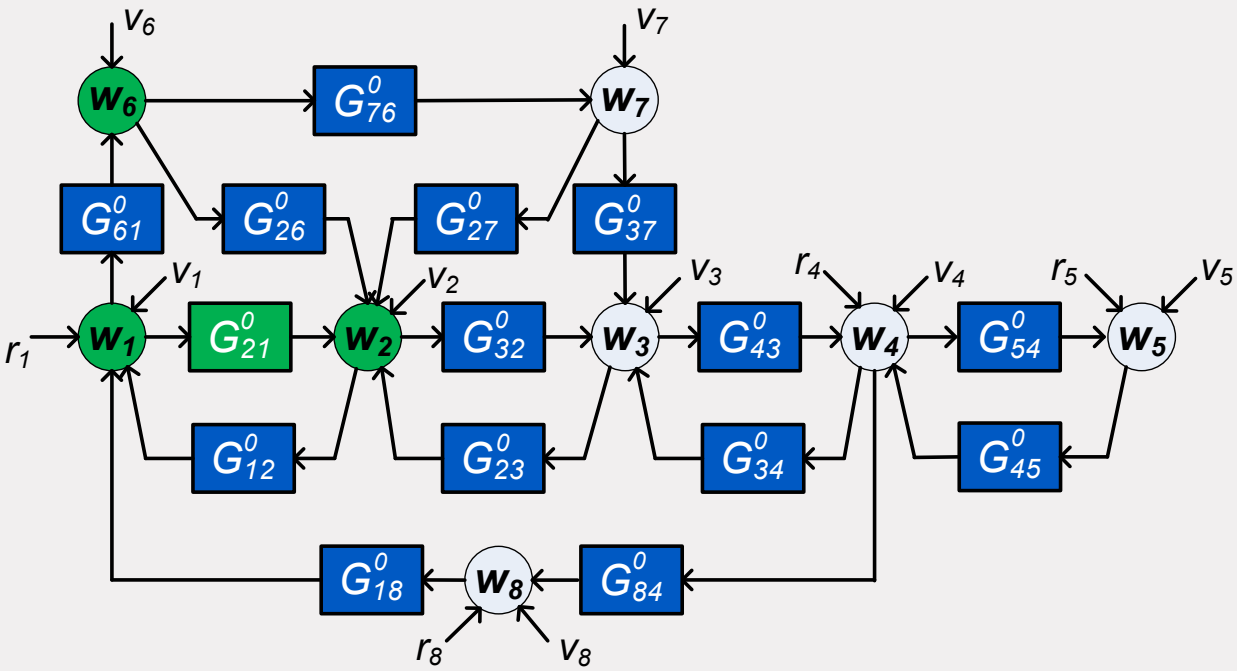

Single module identification

parallel paths, and **loops around the output**

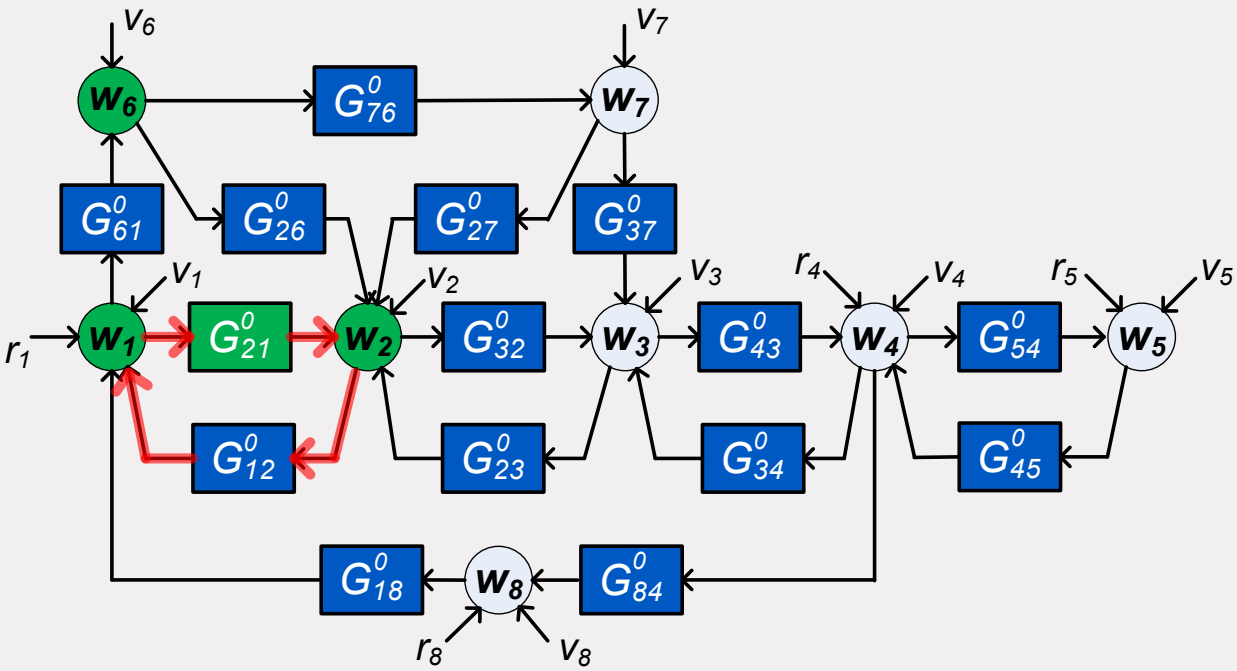

Single module identification

parallel paths, and **loops around the output**

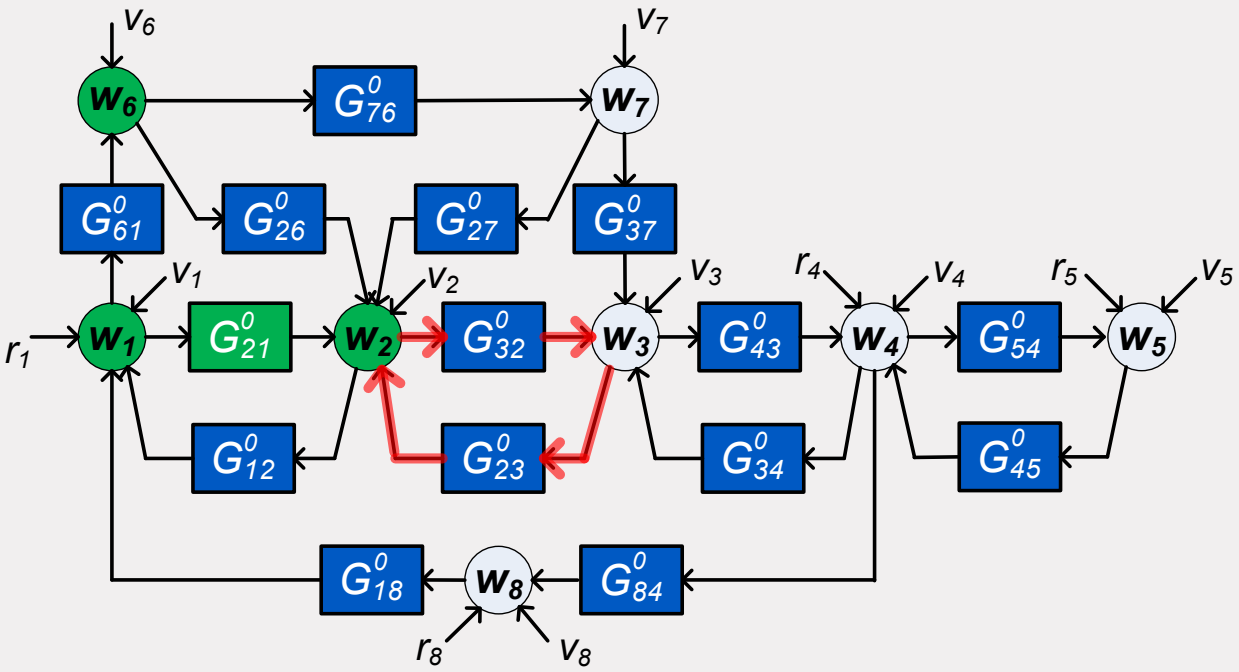

Single module identification

parallel paths, and **loops around the output**

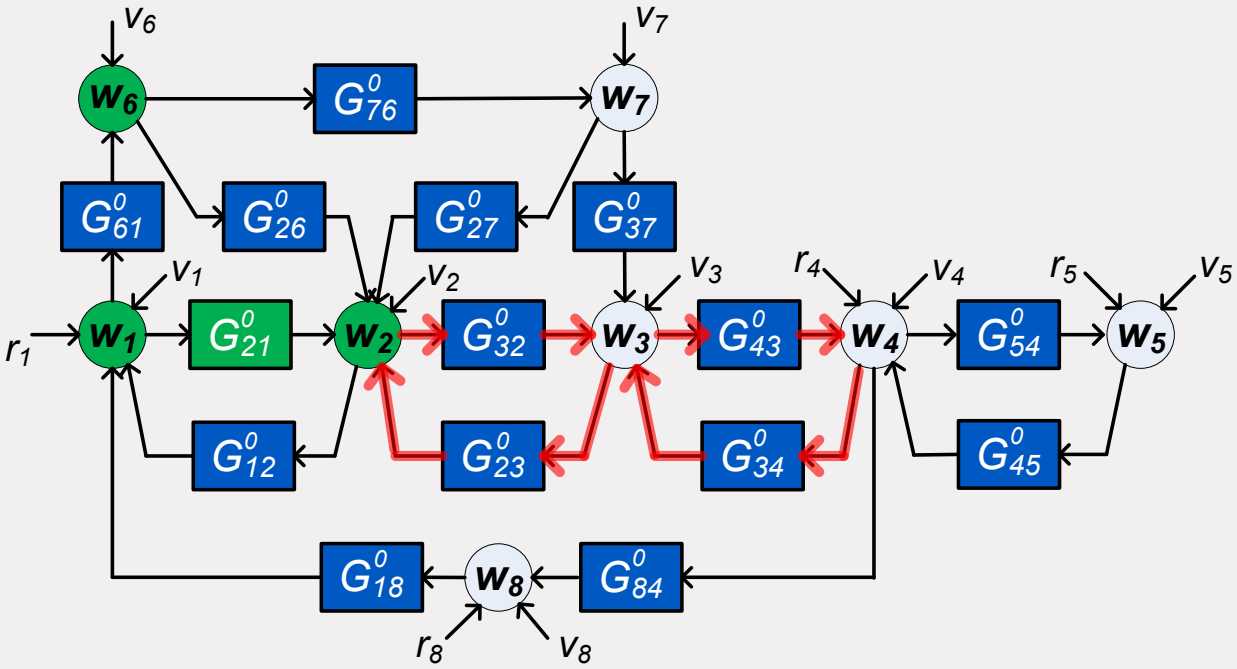

Single module identification

Choose w_3 as an additional input, to be retained

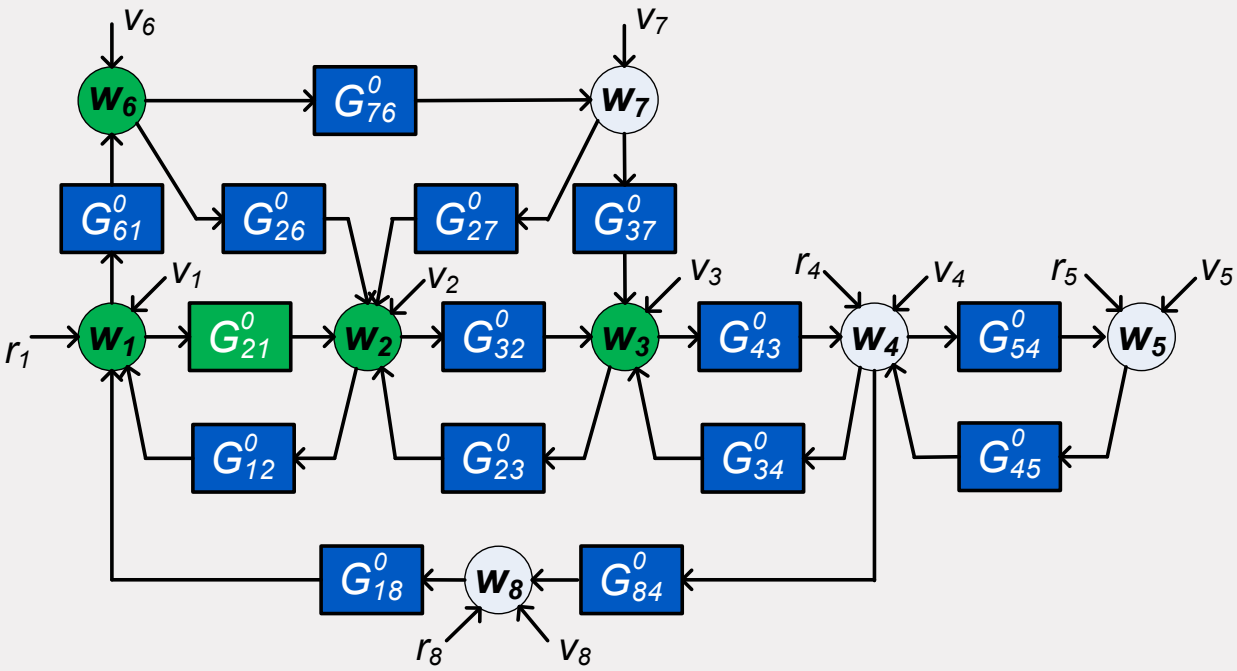

Single module identification

Conclusion:

With a 3-input, 1 output model we can consistently identify G_{21}^0

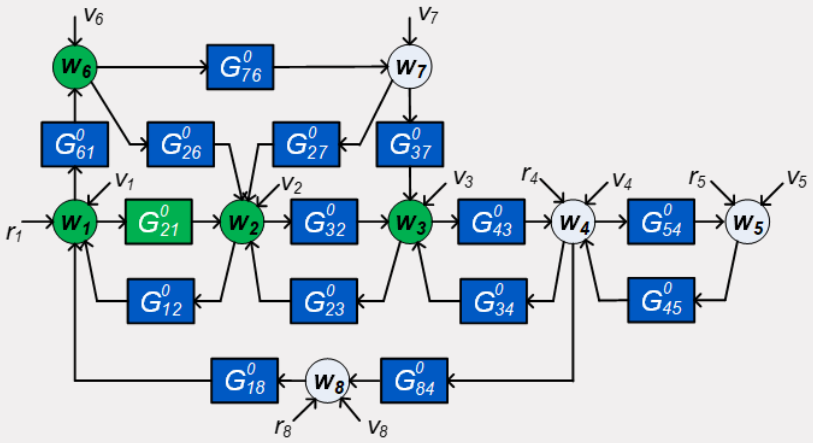

The immersion reasoning is *sufficient* but not *necessary* to arrive at a consistent estimate, see e.g. Linder and Enqvist [1], Bazanella et al. [2], Ramaswamy et al. [3]

[1] J. Linder and M. Enqvist. *Int. J. Control*, 90(4), 729-745, 2017.
[2] A. Bazanella, M. Gevers et al., CDC 2017.
[3] K. Ramaswamy et al., CDC 2019 submitted.

Single module identification

Conclusion:

With a 3-input, 1 output model we can consistently identify G_{21}^0

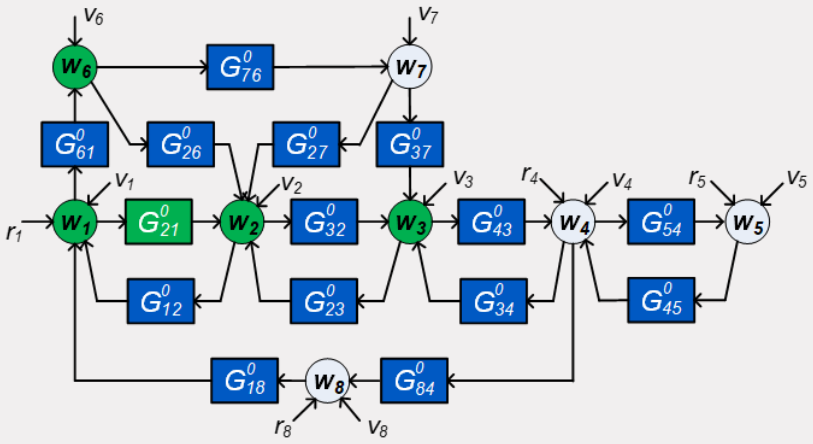

For a consistent and minimum variance estimate (direct method) there is one additional condition:

- absence of **confounding variables,** [1][2] i.e. correlated disturbances on inputs and outputs

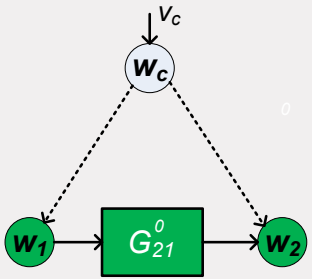

[1] J. Pearl, *Stat. Surveys, 3,* 96-146, 2009

[2] A.G. Dankers et al., *Proc. IFAC World Congress*, 2017.

Confounding variables in the MISO case

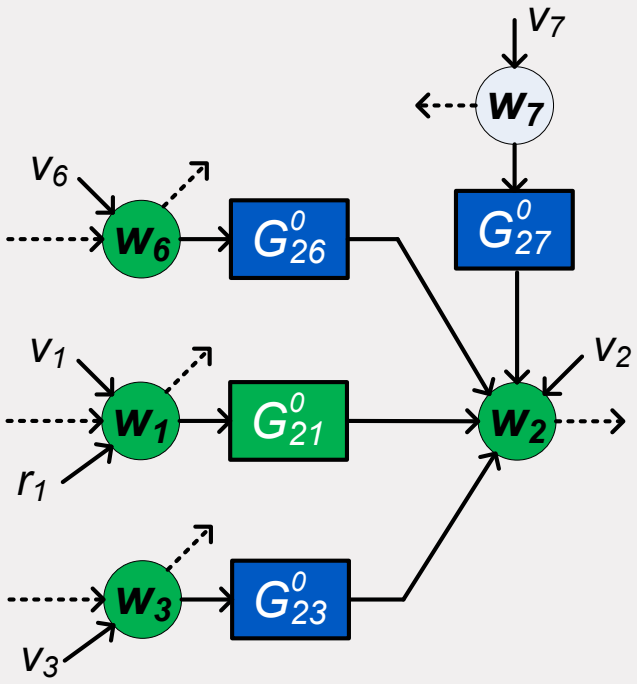

- w_7 (not measured) now acts as a disturbance

Confounding variables in the MISO case

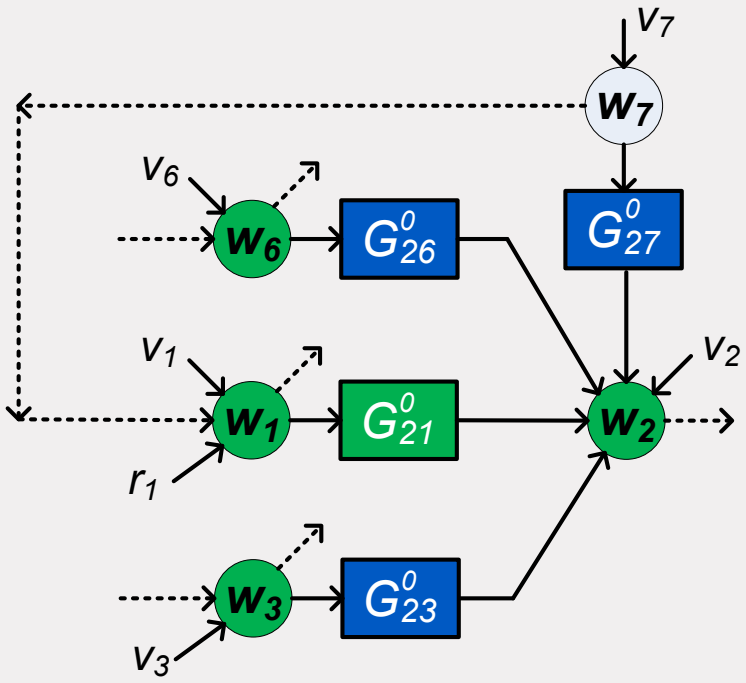

- w_7 (not measured) now acts as a disturbance
- Confounding variable if there is a path from w_7 to an input
- Can be solved by measuring w_7 and including it as input

Confounding variables in the MISO case

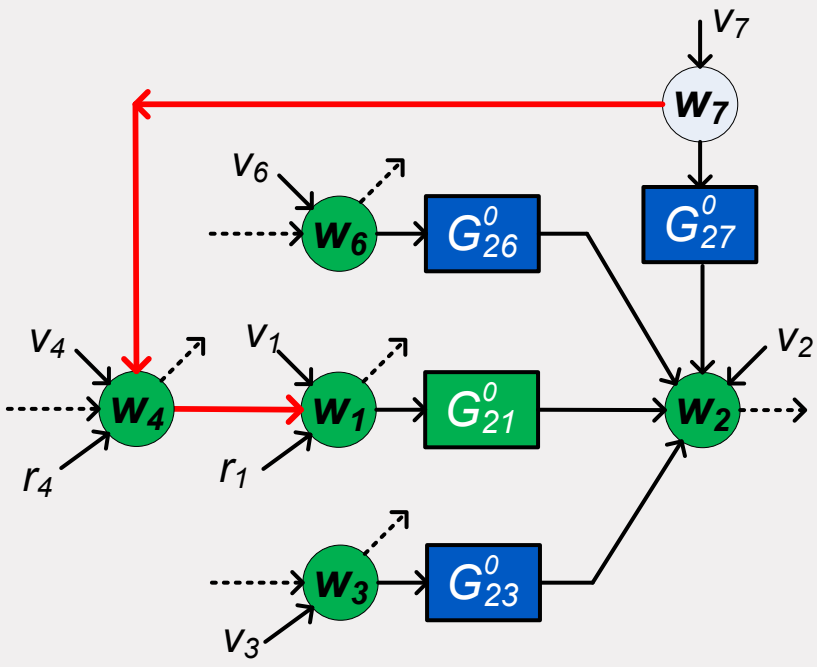

- w_7 (not measured) now acts as a disturbance
- Confounding variable if there is a path from w_7 to an input
- Can be solved by measuring w_7 and including it as input
- Or blocking the paths from w_7 to inputs/outputs by measured nodes, to be used as additional inputs.

Relation with d-separation in graphs (Materassi & Salapaka)

A.G. Dankers et al., *IFAC World Congress*, 2017.

Confounding variables in the MISO case

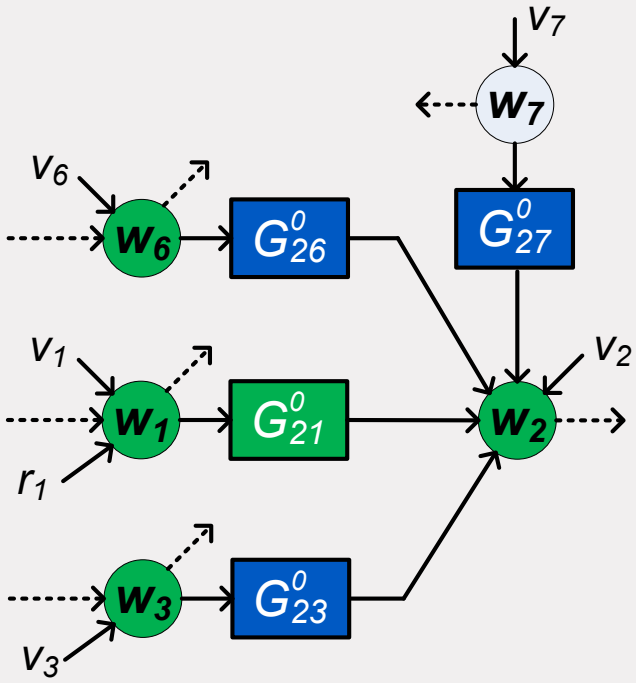

Can we always address confounding variables in this way?

No

If v_2 and v_1 are correlated then:

A MIMO approach with predicted outputs w_2 and w_1 can solve the problem

P.M.J. Van den Hof et al., ArXiv 2018.

Summary single module identification

- Methods for **consistent** and **minimum variance** module estimation
- Graph tools for checking conditions
- Degrees of freedom in selection of measured signals – sensor selection
- A priori known modules can be accounted for

Contents

Network Identifiability

Network identifiability

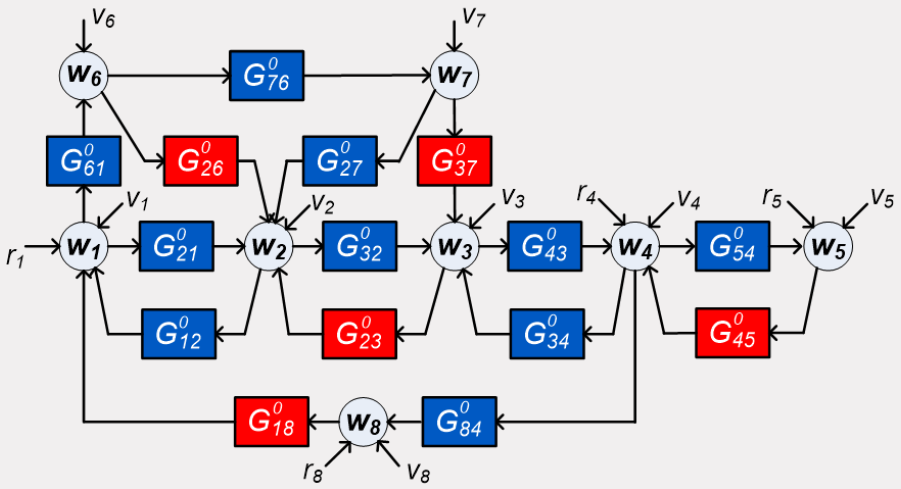

blue = unknown
red = known

Question: Can different dynamic networks be *distinguished* from each other from measured signals w_i, r_i ?

Starting assumption: all signals w_i,r_i that are present are measured.

Network identifiability

Network: $$w = G^0 w + R^0 r + H^0 e \qquad cov(e) = \Lambda^0,$$ rank *p*

dim*(r)* = *K*

The network is defined by: $(G^0, R^0, H^0, \Lambda^0)$

a network model is denoted by: $M = (G, R, H, \Lambda)$

and a **network model set** by:

$$\mathcal{M} = \{M(\theta) = (G(\theta), R(\theta), H(\theta), \Lambda(\theta)), \theta \in \Theta\}$$

represents **prior knowledge** on the network models:

- topology
- disturbance correlation
- known modules
- the signals used for identification

Network identifiability

$$w = (I - G^0)^{-1}[R^0 r + H^0 e]$$

Denote: $w = T^0_{wr} r + \bar{v}$

Objects that are uniquely identified from data r, w : T^0_{wr}, $\Phi^0_{\bar{v}}$

Definition

A network model set $\mathcal{M}$ is network identifiable from (w, r) at $M_0 = M(\theta_0)$ if for all models $M(\theta_1) \in \mathcal{M}$:

$$\left.\begin{array}{r} T_{wr}(q, \theta_1) = T_{wr}(q, \theta_0) \\ \Phi_{\bar{v}}(\omega, \theta_1) = \Phi_{\bar{v}}(\omega, \theta_0) \end{array}\right\} \Longrightarrow M(\theta_1) = M(\theta_0)$$

Weerts et al., SYSID2015; Weerts et al., Automatica, March 2018

Network identifiability

Theorem – identifiability for general model sets

For each node signal w_j, let $\mathcal{P}_j$ be the set of in-neighbours of w_j that map to w_j through a parametrized module.

Then, under fairly general conditions,

$\mathcal{M}$ is network identifiable from (w, r) at $M_0 = M(\theta_0)$ if and only if for all j :

- Each row of $[G(\theta)\ H(\theta)\ R(\theta)]$ has at most $K + p$ parametrized entries
- The transfer matrix from external inputs (r, e) that are non-parametrized in w_j to $\mathcal{P}_j$ has full row rank.

Weerts et al, SYSID2015; Weerts et al., Automatica, March 2018

Example 5-node network

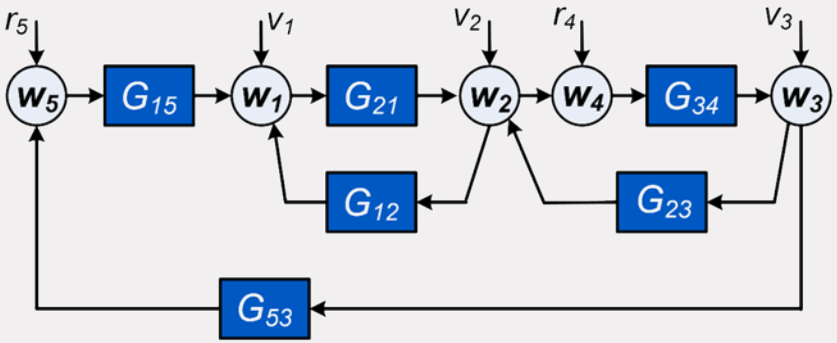

There are noise-free nodes, and v_1 and v_2 are expected to be correlated

$$\mathcal{M} \text{ with } H(\theta) = \begin{bmatrix} H_{11}(\theta) & H_{12}(\theta) & 0 \\ H_{21}(\theta) & H_{22}(\theta) & 0 \\ 0 & 0 & H_{33}(\theta) \\ 0 & 0 & 0 \\ 0 & 0 & 0 \end{bmatrix}, \; R = \begin{bmatrix} 0 & 0 \\ 0 & 0 \\ 0 & 0 \\ 1 & 0 \\ 0 & 1 \end{bmatrix}$$

Example 5-node network

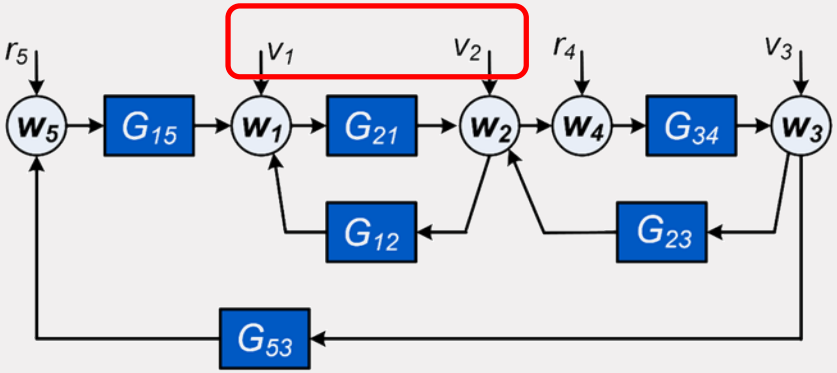

There are noise-free nodes, and v_1 and v_2 are expected to be correlated

$$\mathcal{M} \text{ with } H(\theta) = \begin{bmatrix} H_{11}(\theta) & H_{12}(\theta) & 0 \\ H_{21}(\theta) & H_{22}(\theta) & 0 \\ 0 & 0 & H_{33}(\theta) \\ 0 & 0 & 0 \\ 0 & 0 & 0 \end{bmatrix}, \; R = \begin{bmatrix} 0 & 0 \\ 0 & 0 \\ 0 & 0 \\ 1 & 0 \\ 0 & 1 \end{bmatrix}$$

Example 5-node network

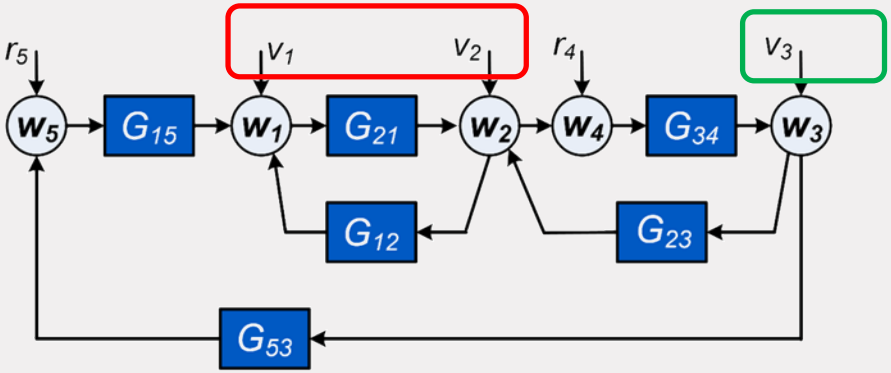

There are noise-free nodes, and v_1 and v_2 are expected to be correlated

$$\mathcal{M} \text{ with } H(\theta) = \begin{bmatrix} H_{11}(\theta) & H_{12}(\theta) & 0 \\ H_{21}(\theta) & H_{22}(\theta) & 0 \\ 0 & 0 & H_{33}(\theta) \\ 0 & 0 & 0 \\ 0 & 0 & 0 \end{bmatrix}, \; R = \begin{bmatrix} 0 & 0 \\ 0 & 0 \\ 0 & 0 \\ 1 & 0 \\ 0 & 1 \end{bmatrix}$$

Example 5-node network

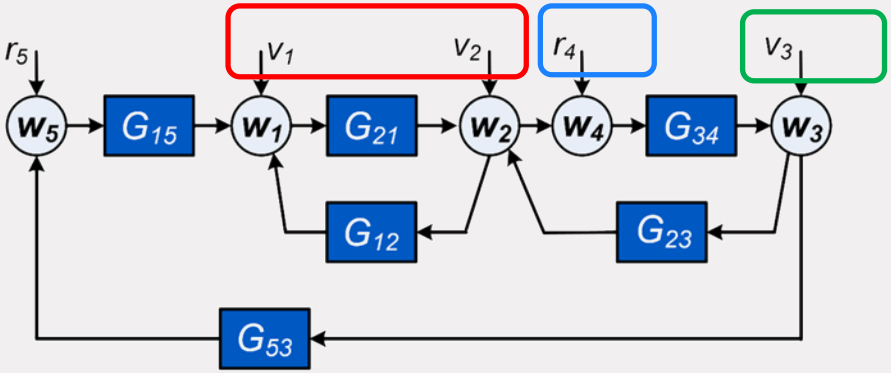

There are noise-free nodes, and v_1 and v_2 are expected to be correlated

$$\mathcal{M} \text{ with } H(\theta) = \begin{bmatrix} H_{11}(\theta) & H_{12}(\theta) & 0 \\ H_{21}(\theta) & H_{22}(\theta) & 0 \\ 0 & 0 & H_{33}(\theta) \\ 0 & 0 & 0 \\ 0 & 0 & 0 \end{bmatrix}, \; R = \begin{bmatrix} 0 & 0 \\ 0 & 0 \\ 0 & 0 \\ 1 & 0 \\ 0 & 1 \end{bmatrix}$$

Example 5-node network

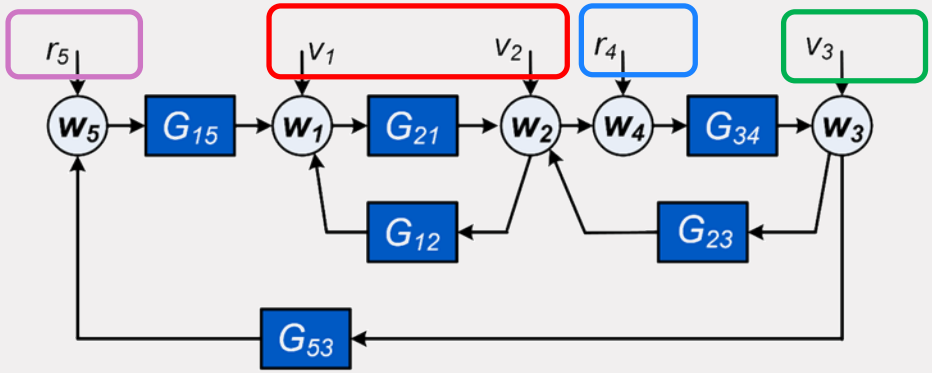

There are noise-free nodes, and v_1 and v_2 are expected to be correlated

$$\mathcal{M} \text{ with } H(\theta) = \begin{bmatrix} H_{11}(\theta) & H_{12}(\theta) & 0 \\ H_{21}(\theta) & H_{22}(\theta) & 0 \\ 0 & 0 & H_{33}(\theta) \\ 0 & 0 & 0 \\ 0 & 0 & 0 \end{bmatrix}, \; R = \begin{bmatrix} 0 & 0 \\ 0 & 0 \\ 0 & 0 \\ 1 & 0 \\ 0 & 1 \end{bmatrix}$$

Example 5-node network

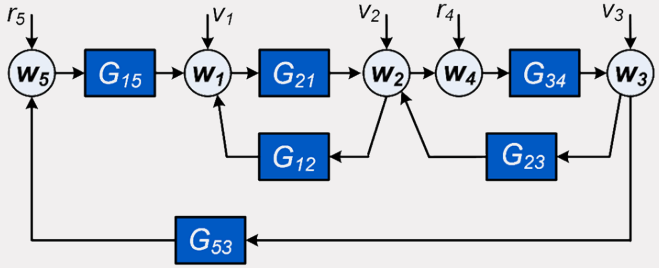

If we restrict the structure of $G(\theta)$:

$$G(\theta) = \begin{bmatrix} 0 & G_{12}(\theta) & 0 & 0 & G_{15}(\theta) \\ G_{21}(\theta) & 0 & G_{23}(\theta) & 0 & 0 \\ 0 & 0 & 0 & G_{34}(\theta) & 0 \\ 0 & 1 & 0 & 0 & 0 \\ 0 & 0 & G_{53}(\theta) & 0 & 0 \end{bmatrix} \qquad [H\ R] = \underbrace{\begin{bmatrix} H_{11}(\theta) & H_{12}(\theta) & 0 & 0 & 0 \\ H_{21}(\theta) & H_{22}(\theta) & 0 & 0 & 0 \\ 0 & 0 & H_3(\theta) & 0 & 0 \\ 0 & 0 & 0 & 1 & 0 \\ 0 & 0 & 0 & 0 & 1 \end{bmatrix}}_{K+p=5}$$

First condition:
Number of parametrized entries in each row < K+p = 5 ✅

Example 5-node network

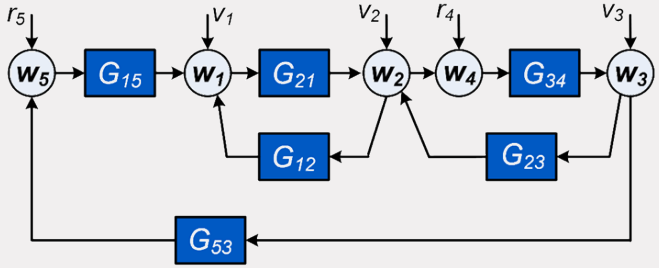

$$G(\theta) = \begin{bmatrix} 0 & G_{12}(\theta) & 0 & 0 & G_{15}(\theta) \\ G_{21}(\theta) & 0 & G_{23}(\theta) & 0 & 0 \\ 0 & 0 & 0 & G_{34}(\theta) & 0 \\ 0 & 1 & 0 & 0 & 0 \\ 0 & 0 & G_{53}(\theta) & 0 & 0 \end{bmatrix} \qquad [H\ R] = \underbrace{\begin{bmatrix} H_{11}(\theta) & H_{12}(\theta) & 0 & 0 & 0 \\ H_{21}(\theta) & H_{22}(\theta) & 0 & 0 & 0 \\ 0 & 0 & H_3(\theta) & 0 & 0 \\ 0 & 0 & 0 & 1 & 0 \\ 0 & 0 & 0 & 0 & 1 \end{bmatrix}}_{K+p=5}$$

Rank condition:

Row 1: Full row rank of transfer: $\begin{bmatrix} v_3 \\ r_4 \\ r_5 \end{bmatrix} \rightarrow \begin{bmatrix} w_2 \\ w_5 \end{bmatrix}$

Example 5-node network

Verifying the rank condition for w_1 :

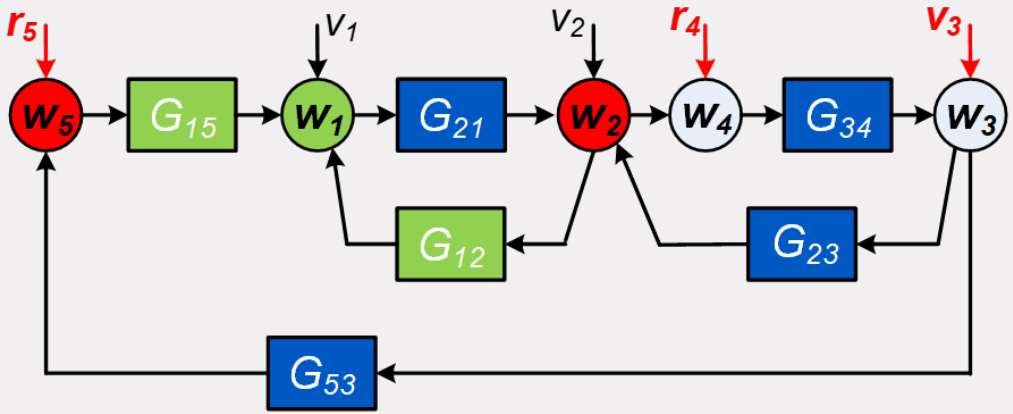

$j = 1$:Evaluate the rank of the transfer matrix $\begin{bmatrix} v_3 \\ r_4 \\ r_5 \end{bmatrix} \rightarrow \begin{bmatrix} w_2 \\ w_5 \end{bmatrix}$

Example 5-node network

Verifying the rank condition for w_1 :

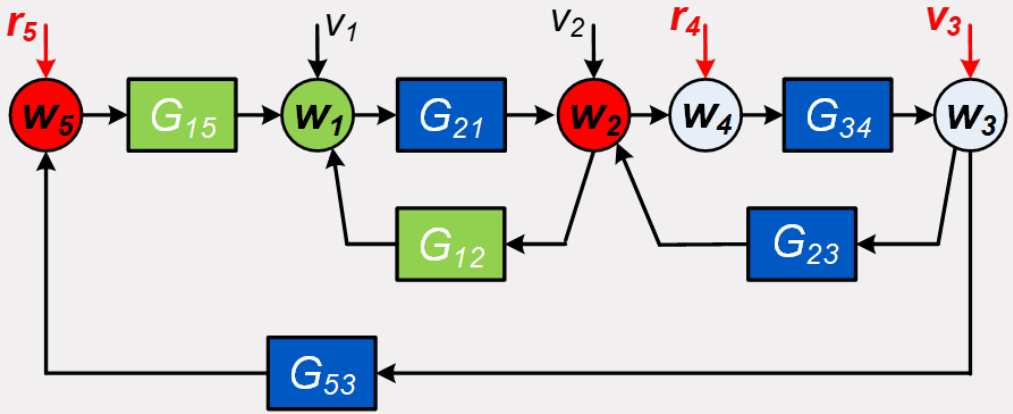

$j = 1$:Evaluate the rank of the transfer matrix $\begin{bmatrix} v_3 \\ r_4 \\ r_5 \end{bmatrix} \rightarrow \begin{bmatrix} w_2 \\ w_5 \end{bmatrix}$

Example 5-node network

Verifying the rank condition for w_1:

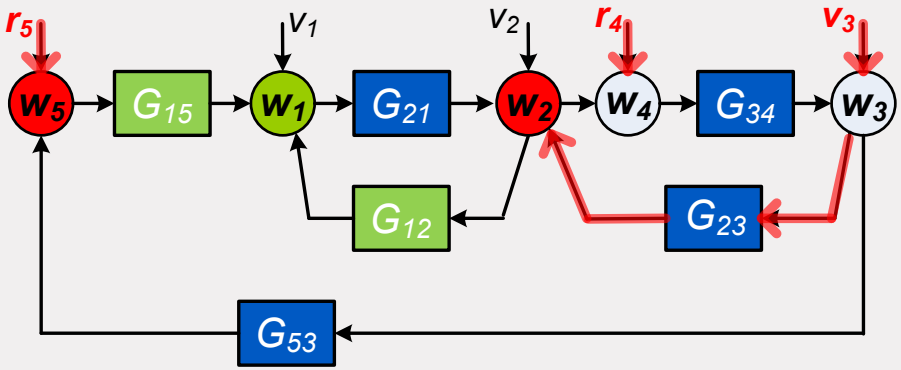

$$\begin{bmatrix} v_3 \\ r_4 \\ r_5 \end{bmatrix} \longrightarrow \begin{bmatrix} w_2 \\ w_5 \end{bmatrix}$$

For the generic case, the rank can be calculated by a graph-based condition[1],[2],[3] :

Generic rank = number of vertex-disjoint paths

2 vertex-disjoint paths → full row rank 2

[1] Van der Woude, 1991
[2] Hendrickx, Gevers & Bazanella, CDC 2017 [3] Weerts et al., CDC 2018

Graph-based synthesis solution for full network

Decompose network in disjoint pseudo-trees:

- Connected directed graphs, where nodes have maximum indegree 1
- Edges are disjoint and all out-neighbours of a node are in the same pseudo-tree

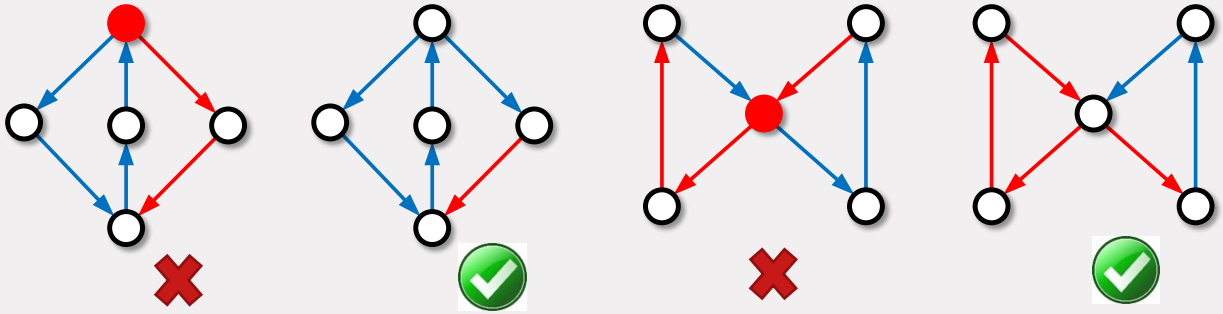

- Any network can be decomposed into a set of disjoint pseudo-trees

Graph-based synthesis solution for full network

Result[1]

A network is generically identifiable if

- It can be decomposed in K disjoint pseudo-trees, and
- There are K independent external signals entering at a **root** of each pseudo-tree

Two typical (disjunct) pseudo-trees:

Tree with root in green

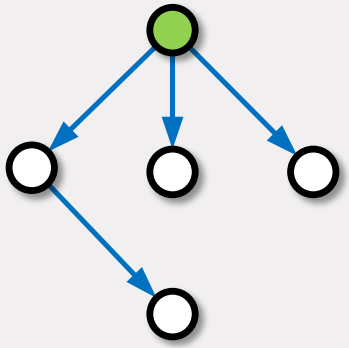

Cycle with outgoing trees;
Any node in cycle is root

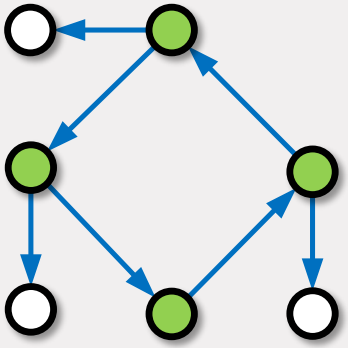

[1] X. Cheng, S. Shi and PVdH, CDC 2019, submitted.

Where to allocate external excitations for network identifiability?

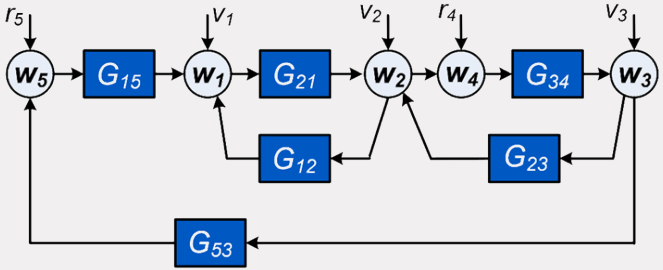

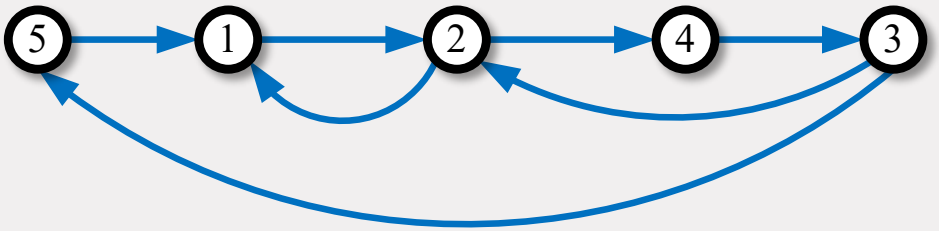

Two disjunct pseudo-trees

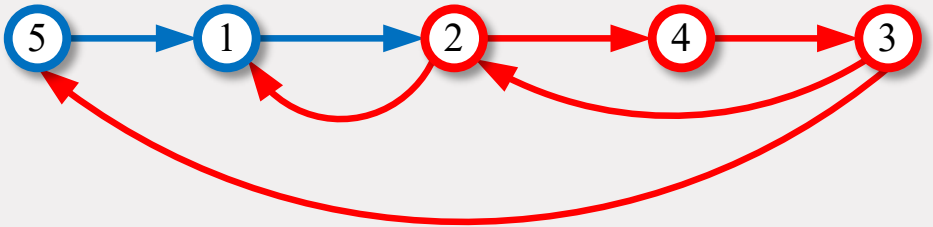

Where to allocate external excitations for network identifiability?

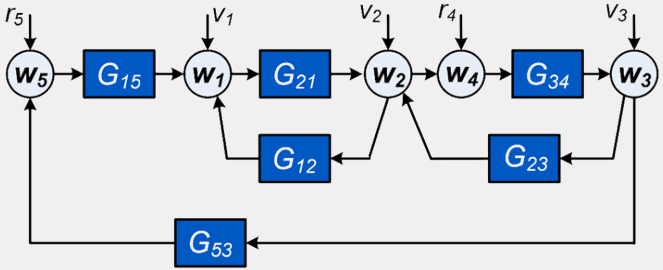

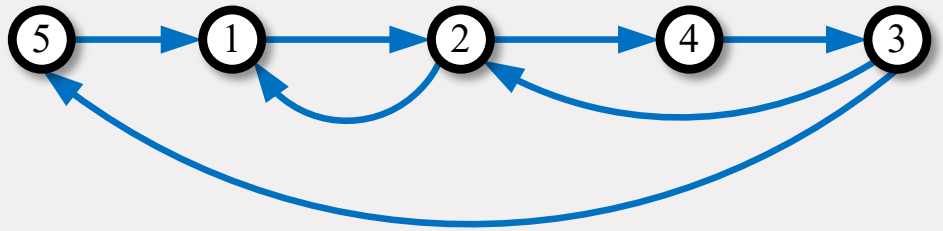

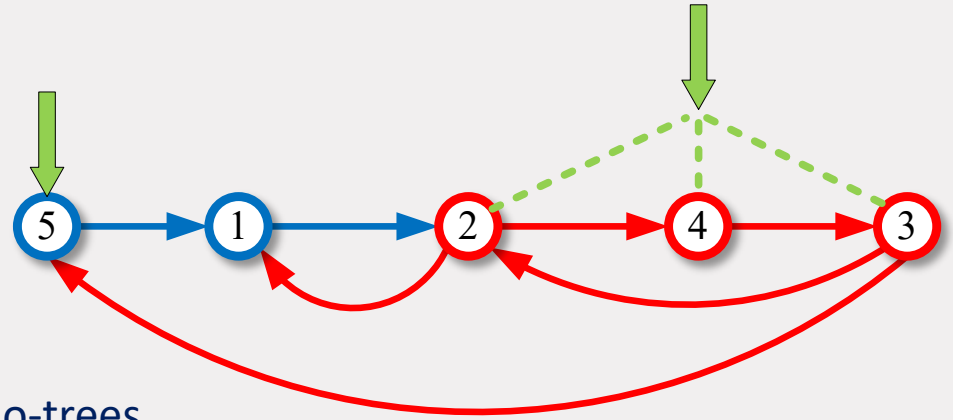

Two independent excitations guarantee network identifiability

Algorithm available for merging pseudo-trees.

Summary identifiability

Identifiability of network model sets is determined by

- Presence and location of external signals, and
- Correlation of disturbances
- Prior knowledge on modules

So far:

- All node signals assumed to be measured
- Fully applicable to the situation $p < L$ (i.e. reduced-rank noise)
- Identifiability of the full network model – conditions per row/output node
- Extensions towards identifiability of a single module [1],[2]

[1] Hendrickx, Gevers & Bazanella, CDC 2017, IEEE-TAC 2019
[2] Weerts et al., CDC 2018

Contents

Diffusively coupled physical networks

Back to the basics of physical interconnections

In connecting physical systems, there is often no predetermined direction of information [1]

Example: resistor / spring connection in electrical / mechanical system:

Resistor

$$I = \frac{1}{R}(V_1 - V_2)$$

Spring

$$F = K(x_1 - x_2)$$

Difference of node signals drives the interaction: **diffusive coupling**

[1] J.C. Willems (1997,2010)

Diffusively coupled physical network

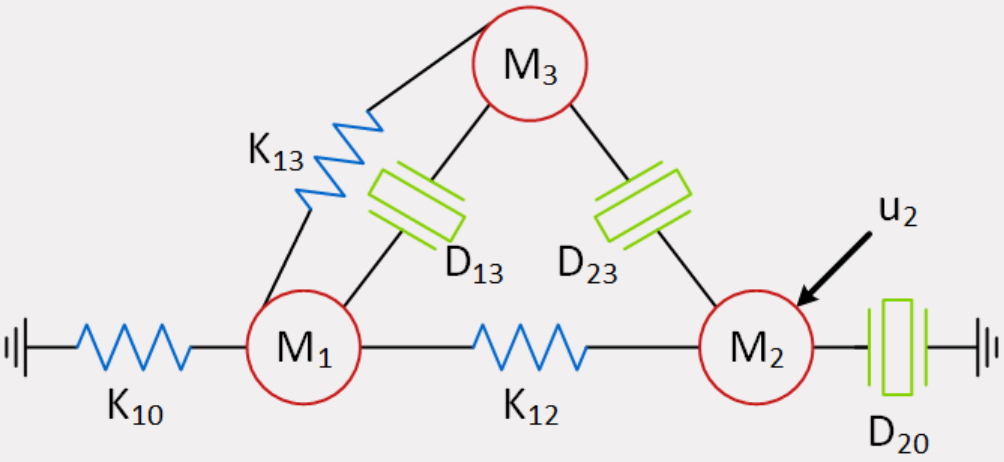

Equation for node *j*:

$$M_j\ddot{w}_j(t)+D_{j0}\dot{w}_j(t)+\sum_{k\neq j}D_{jk}(\dot{w}_j(t)-\dot{w}_k(t))+K_{j0}w_j(t)+\sum_{k\neq j}K_{jk}(w_j(t)-w_k(t))=u_j(t),$$

Mass-spring-damper system

- Masses M_j
- Springs K_{jk}
- Dampers D_{jk}
- Input u_j

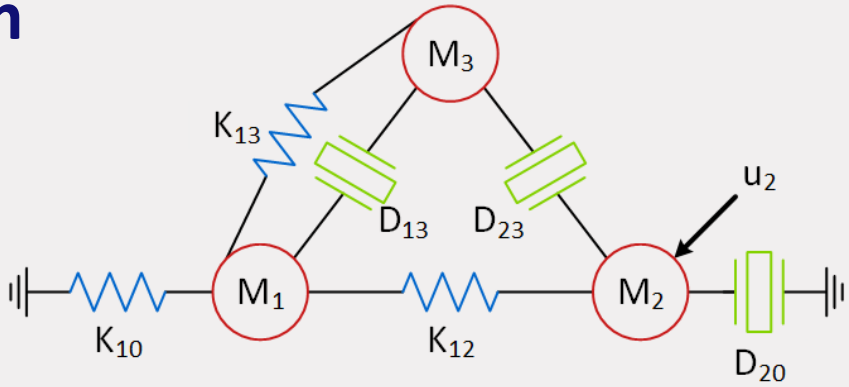

$$\begin{bmatrix} M_1 & & \\ & M_2 & \\ & & M_3 \end{bmatrix}\begin{bmatrix} \ddot{w}_1 \\ \ddot{w}_2 \\ \ddot{w}_3 \end{bmatrix} + \begin{bmatrix} 0 & & \\ & D_{20} & \\ & & 0 \end{bmatrix}\begin{bmatrix} \dot{w}_1 \\ \dot{w}_2 \\ \dot{w}_3 \end{bmatrix} + \begin{bmatrix} K_{10} & & \\ & 0 & \\ & & 0 \end{bmatrix}\begin{bmatrix} w_1 \\ w_2 \\ w_3 \end{bmatrix}$$

$$+ \begin{bmatrix} D_{13} & 0 & -D_{13} \\ 0 & D_{23} & -D_{23} \\ -D_{13} & -D_{23} & D_{13}+D_{23} \end{bmatrix}\begin{bmatrix} \dot{w}_1 \\ \dot{w}_2 \\ \dot{w}_3 \end{bmatrix} + \begin{bmatrix} K_{12}+K_{13} & -K_{12} & -K_{13} \\ -K_{12} & K_{12} & 0 \\ -K_{13} & 0 & K_{13} \end{bmatrix}\begin{bmatrix} w_1 \\ w_2 \\ w_3 \end{bmatrix} = \begin{bmatrix} 0 \\ u_2 \\ 0 \end{bmatrix}$$

$$[\ \underbrace{A(p)}_{diagonal} + \underbrace{B(p)}_{Laplacian}\ ]\ w(t) = u(t) \qquad A(p), B(p) \text{ polynomial} \qquad p = \frac{d}{dt}$$

Mass-spring-damper system

$$[\ \underbrace{A(p)}_{diagonal} + \underbrace{B(p)}_{Laplacian}\ ]\ w(t) = u(t) \qquad A(p), B(p) \text{ polynomial}$$

$$[\ \underbrace{Q(p)}_{diagonal} - \underbrace{P(p)}_{hollow}\ ]\ w(t) = u(t)$$

$$Q_{11} = M_1\, p^2 + D_{13}\, p + (K_{10} + K_{12} + K_{13})$$
$$Q_{22} = M_2\, p^2 + (D_{20} + D_{23})\, p + K_{12}$$
$$Q_{33} = M_3\, p^2 + (D_{13} + D_{23})\, p + K_{13}$$

Q_{jj} : elements related to node w_j :

$P_{ji} = P_{ij}$:
elements related to interconnection

$$P = \begin{bmatrix} 0 & K_{12} & D_{13}\, p + K_{13} \\ K_{12} & 0 & D_{23}\, p \\ D_{13}\, p + K_{13} & D_{23}\, p & 0 \end{bmatrix}$$

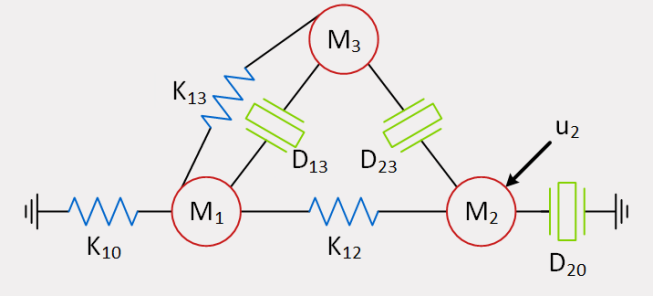

Module representation

$$[\underbrace{Q(p)}_{diagonal} - \underbrace{P(p)}_{hollow}]\, w(t) = Fr(t) + C(p)e(t)$$

$$w(t) = Q^{-1}Pw(t) + Q^{-1}Fr(t) + Q^{-1}C(p)e(t)$$

This fully fits in the earlier module representation:

$$w(t) = Gw(t) + Rr(t) + He(t)$$

with the additional condition that:

$$G(p) = Q(p)^{-1}P(p)$$

$Q(p), P(p)$ polynomial

$P(p)$ symmetric, $Q(p)$ diagonal

Module representation

Consequences for node interactions:

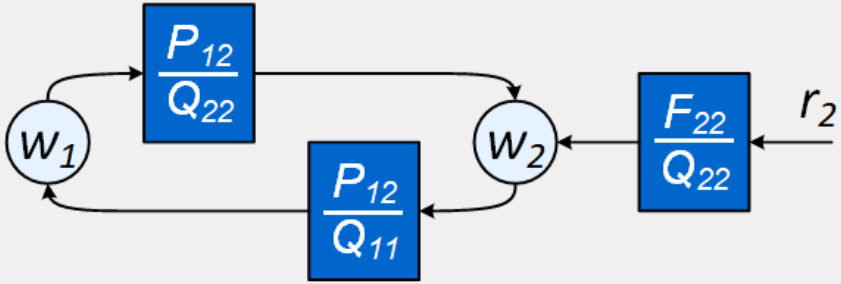

- Node interactions come in pairs of modules
- Where numerators are the same

Framework for network identification remains the same

- Symmetry can simply be incorporated in identification

Local network identification

Identification of **one** physical interconnection

Identification of **two** modules G_{jk} and G_{kj}

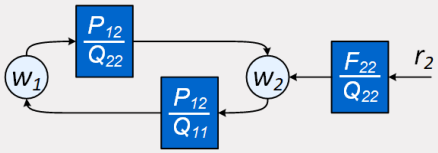

$G_{jk} = Q_{jj}^{-1} P_{jk}$ and $G_{kj} = Q_{kk}^{-1} P_{kj}$ with $P_{jk} = P_{jk}$

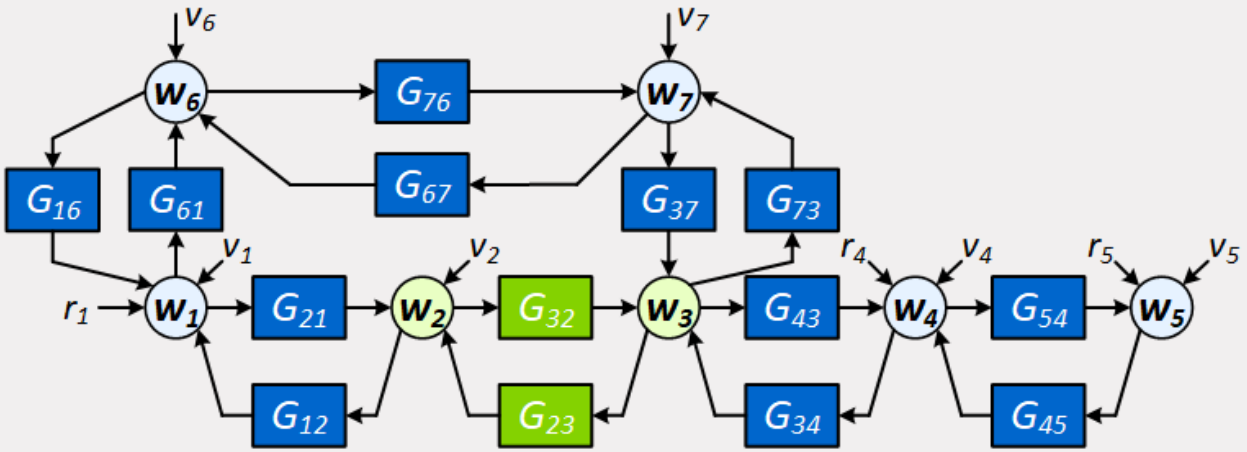

Immersion conditions

For simultaneously identifying two modules in one interconnection:

The parallel path and loops-around-the-output condition of immersion, now simplifies to:

All neighbouring nodes of w_2 and w_3 need to be retained/measured.

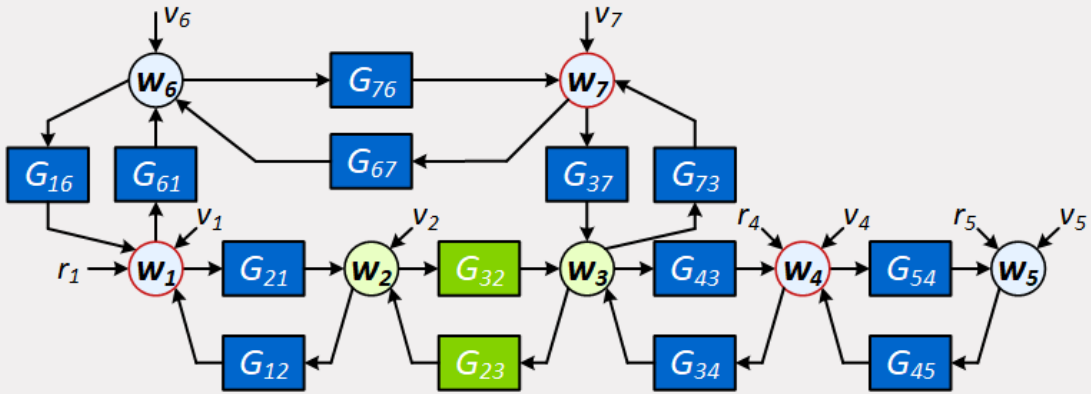

E.E.M. Kivits et al., CDC 2019 submitted.

Summary diffusively coupled physical networks

- Physical networks fit within the module framework (special case)

  - no restriction to second order equations

- Identification algorithms and identifiability analysis can be utilized
- Local identification is well-addressed (and stays really local)
- Framework is fit for representing **cyber-physical systems**

Extensions - Discussion

Extensions - Discussion

- **Identification algorithms to deal with reduced rank noise** [1]
  - number of disturbance terms is larger than number of white sources
  - Optimal identification criterion becomes a constrained quadratic problem with ML properties for Gaussian noise
  - Reworked Cramer Rao lower bound
  - Some parameters can be estimated variance free

- **Including sensor noise** [2]
  - Errors-in-variabels problems can be more easily handled in a network setting

[1] Weerts et al., Automatica, December 2018.
[2] Dankers et al., Automatica, 2015.

Extensions - Discussion

- **Machine learning tools for estimating large scale models** [1,2]
  - Choosing correctly parametrized model sets for all modules is impractical
  - Use of Gaussian process priors for kernel-based estimation of models

- **From centralized to distributed estimation (MISO models)** [3]
  - Communication constraints between different agents
  - Recursive (distributed) estimator converges to global optimizer (more slowly)

[1] Everitt et al., Automatica, 2018.
[2] Ramaswamy et al., CDC 2018.
[3] Steentjes et al., IFAC-NECSYS, 2018.

Discussion

- **Dynamic network identification:**
  intriguing research topic with many open questions
- The (centralized) LTI framework is only just the beginning
- Further move towards data-aspects related to distributed control
- and large-scale aspects
- and bring it to real-life applications

Acknowledgements

Lizan Kivits, Shengling Shi, Karthik Ramaswamy,
Tom Steentjes, Mircea Lazar, Jobert Ludlage,
Giulio Bottegal, Maarten Schoukens, Xiaodong Cheng

Co-authors, contributors and discussion partners:

Arne Dankers

Harm Weerts

Xavier Bombois
Peter Heuberger
Donatelllo Materassi
Manfred Deistler
Michel Gevers
Jonas Linder
Sean Warnick
Alessandro Chiuso
Hakan Hjalmarsson
Miguel Galrinho

European Research Council

Further reading

- P.M.J. Van den Hof, A. Dankers, P. Heuberger and X. Bombois (2013). Identification of dynamic models in complex networks with prediction error methods - basic methods for consistent module estimates. *Automatica*, Vol. 49, no. 10, pp. 2994-3006.
- A. Dankers, P.M.J. Van den Hof, X. Bombois and P.S.C. Heuberger (2015). Errors-in-variables identification in dynamic networks - consistency results for an instrumental variable approach. *Automatica*, Vol. 62, pp. 39-50, December 2015.
- A. Dankers, P.M.J. Van den Hof, P.S.C. Heuberger and X. Bombois (2016). Identification of dynamic models in complex networks with predictior error methods - predictor input selection. *IEEE Trans. Autom. Contr.*, *61 (4),* pp. 937-952, 2016.
- H.H.M. Weerts, P.M.J. Van den Hof and A.G. Dankers (2018). Identifiability of linear dynamic networks. *Automatica*, 89, pp. 247-258, March 2018.
- H.H.M. Weerts, P.M.J. Van den Hof and A.G. Dankers (2018). Prediction error identification of linear dynamic networks with rank-reduced noise. *Automatica, 98,* pp. 256-268, December 2018.
- H.H.M. Weerts, P.M.J. Van den Hof and A.G. Dankers (2018). Single module identifiability in linear dynamic networks. Proc. 57th IEEE CDC 2018, ArXiv 1803.02586.
- K.R. Ramaswamy, G. Bottegal and P.M.J. Van den Hof (2018). Local module identification in dynamic networks using regularized kernel-based methods. Proc. 57th IEEE CDC 2018.
- H.H.M. Weerts, J. Linder, M. Enqvist and P.M.J. Van den Hof (2019). Abstractions of linear dynamic networks for input selection in local module identification. Submitted for publication. ArXiv 1901.00348.
- P.M.J. Van den Hof, K.R. Ramaswamy, A.G. Dankers and G. Bottegal. Local module identification in dynamic networks with correlated noise: the full input case. Submitted to 2019 CDC. ArXiv 1809.07502.

Papers available at www.pvandenhof.nl

The end