Excitation allocation for generic identifiability of a single module in dynamic networks: A graphical approach

S. Shi, X. Cheng, P. M. J. Van den Hof

21st IFAC World Congress, July, 2020

Department of Electrical Engineering, Control Systems Group

Introduction

Dynamic networks appear in many real-world problems:

- Brain networks
  - Effect of music on brain connectivity [1]
- Biological networks
  - Gene network involved in cancer [2]
- Image processing [3]

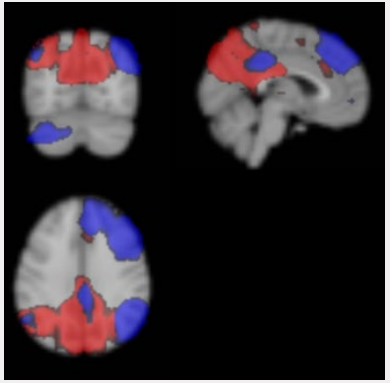

[1] R. van Esch et al., 2019
[3] Y. Wang et al. *ACC* 2016.
[2] M. S. Furqan, M. Y. Siyal. *SpringerPuls*, 2016

Dynamic networks

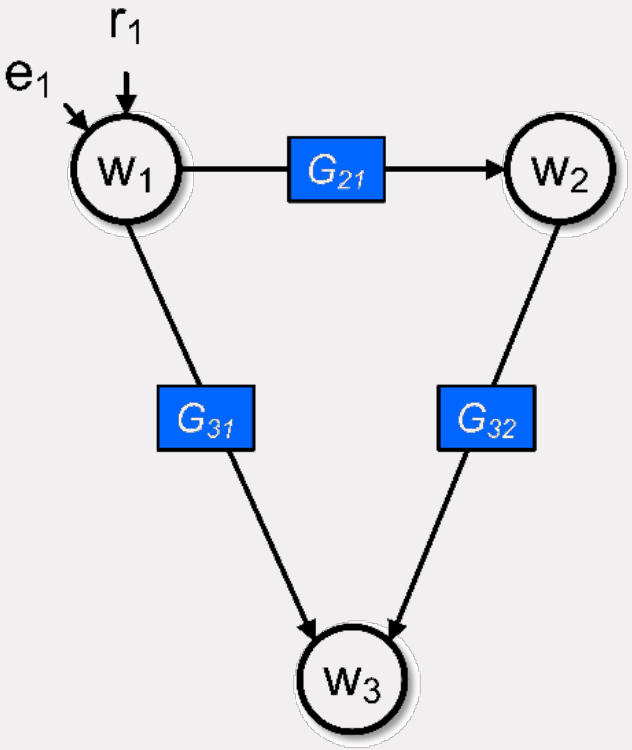

Prior choice on the interconnection structure of the model

$$\begin{bmatrix} w_1(t) \\ w_2(t) \\ w_3(t) \end{bmatrix} = \begin{bmatrix} 0 & 0 & 0 \\ G_{21}(q,\theta) & 0 & 0 \\ G_{31}(q,\theta) & G_{32}(q,\theta) & 0 \end{bmatrix} \begin{bmatrix} w_1(t) \\ w_2(t) \\ w_3(t) \end{bmatrix} + \begin{bmatrix} r_1(t) \\ 0 \\ 0 \end{bmatrix} + \begin{bmatrix} H_1(q,\theta)e_1(t) \\ 0 \\ 0 \end{bmatrix}$$

where $q^{-1}w_1(t) = w_1(t-1)$

$$w(t) = G(q,\theta)w(t) + Rr(t) + H(q,\theta)e(t)$$

Model set $\mathcal{M}$ as $\theta \in \Theta \subseteq \mathbb{R}^n$

- Internal signals: $w(t)$
- External signals: $r(t),\ e(t)$

Contents

Identifiability of a single module

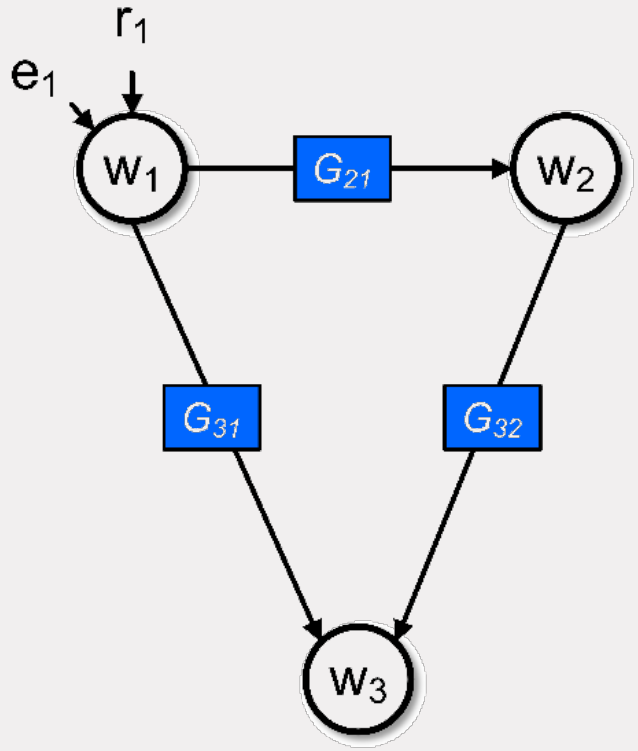

- Assume that all internal signals are measured
- Given the model set (graph) and the mapping from external signals to internal signals, can G_{31} be uniquely recovered?
  - The mapping can typically be identified from the measurements
- Which internal signals to excite such that G_{31} can be uniquely recovered?

Identifiability of a single module: An example

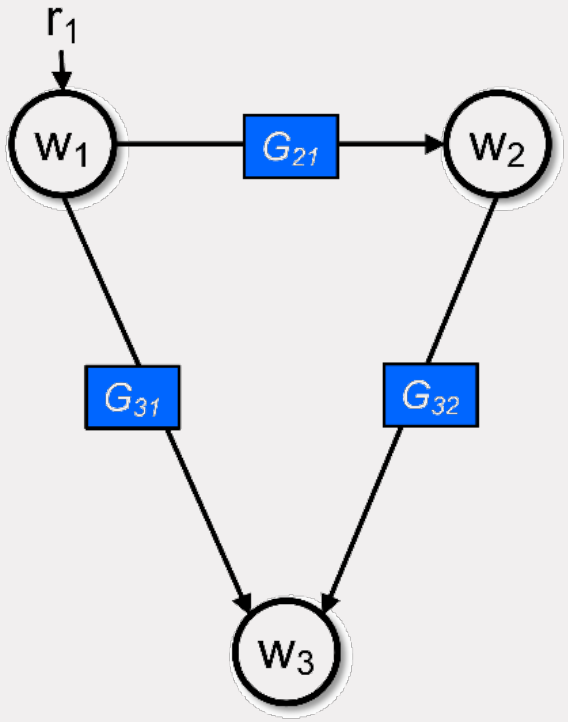

- Excite only $w_1(t)$
- Mappings from the external signal to all internal signals:

$$T_{w_1 r_1} = 1$$

$$T_{w_2 r_1} = G_{21}$$

$$T_{w_3 r_1} = G_{31} + G_{32} G_{21}$$

- G_{31} can not be recovered uniquely from the above equations

Identifiability of a single module

$$w = Gw + Rr + He$$

Model set $\mathcal{M}$ as $\theta \in \Theta \subseteq \mathbb{R}^n$

$$T := (I - G)^{-1} \begin{bmatrix} R & H \end{bmatrix}$$

Combine the identifiability concept [1] and the notion of genericity [2,3]

Definition

G_{ji} in a network model set $\mathcal{M}$ is (generically) identifiable from measured $(w(t), r(t))$ if for (almost) all $\theta_1 \in \Theta$, it holds that

$$T(q, \theta_1) = T(q, \theta_2) \implies G_{ji}(q, \theta_1) = G_{ji}(q, \theta_2),$$

for all $\theta_2 \in \Theta$.

This presentation considers the generic version ⟶ Path-based conditions

[1] H. Weerts et al., *Automatica*, March 2018;
[2] A. S. Bazanella et all., *CDC*, 2017;
[3] J. M. Hendrickx et al., *IEEE-TAC*, 2019.

Target of this work

- The existing paths-based conditions [1,2] are suitable for analysis but not suitable for synthesis
- A novel reformulation of the path-based conditions that is better for synthesis
- The new condition leads to synthesis approaches to allocate excitation signals for generic identifiability of a single module

[1] J. M. Hendrickx et al., *IEEE-TAC*, 2019.

[2] H. Weerts et al., *CDC*, 2018;

Contents

Graphical condition: Path-based condition [1,2]

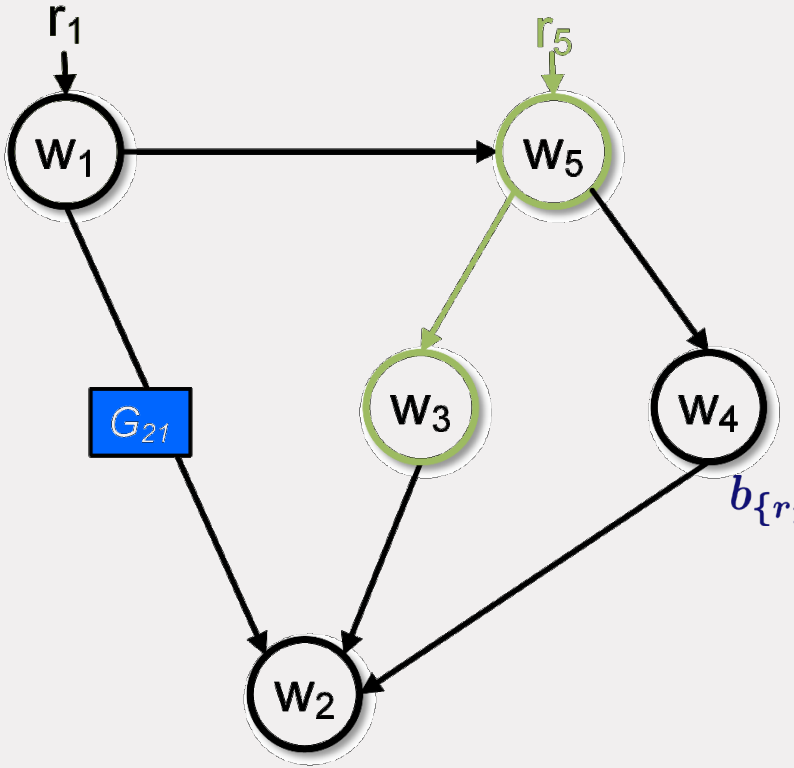

- Generic identifiability of G_{21}
- $b_{\mathcal{V}_1 \to \mathcal{V}_2}$ denotes the maximum number of vertex disjoint paths from vertex set $\mathcal{V}_1$ to vertex set $\mathcal{V}_2$
- Sufficient and necessary condition:

$$b_{\{r_1,r_5\}\to\{w_1,w_3,w_4\}} = b_{\{r_1,r_5\}\to\{w_1\}} + b_{\{r_1,r_5\}\to\{w_3,w_4\}}$$

- Results:

$$2 = 1 + 1$$

- No explicit statement about which signals should be excited

[1] J. M. Hendrickx et al., *IEEE-TAC*, 2019.

[2] H. Weerts et al., *CDC*, 2018;

Graphical condition

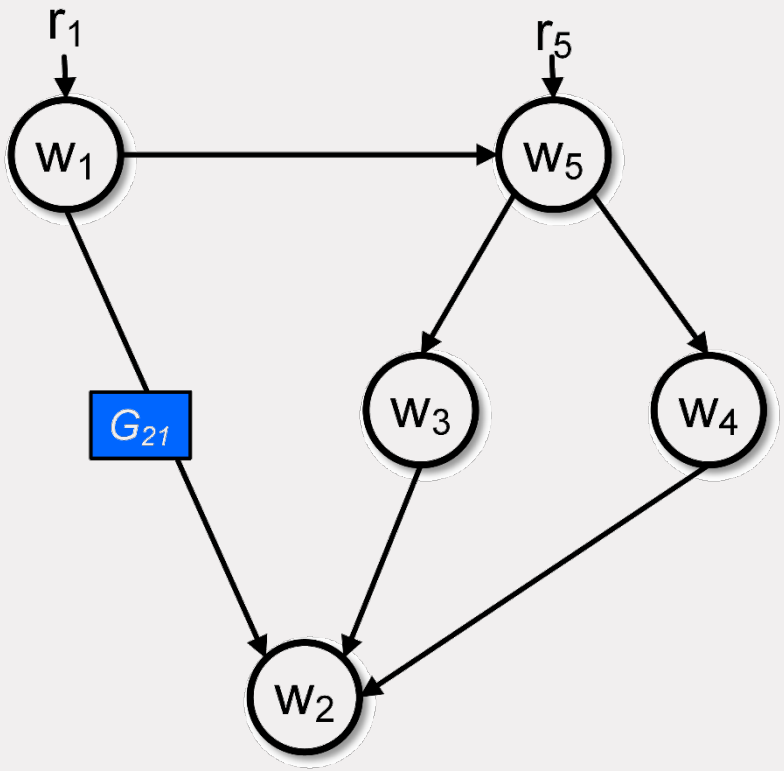

- To reformulate the condition, a new observation:
- w_5 blocks all paths from w_1 to $\{w_3, w_4\}$
- Can we generalize this ?

Graphical condition

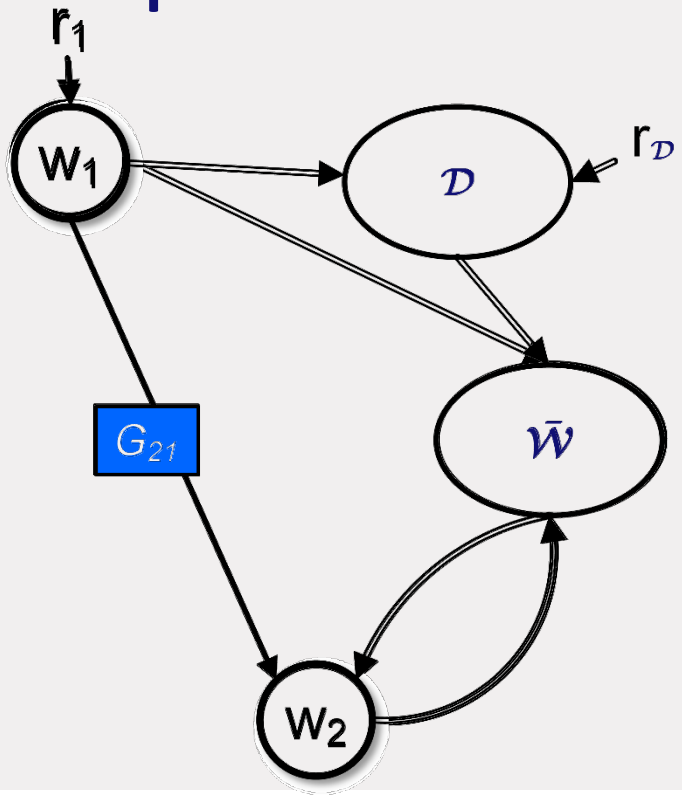

- Under what conditions can G_{21} be identified generically?
- Signals in $\mathcal{D}$ block all paths from w_1 to $\bar{\mathcal{W}}$
- Signals in $\mathcal{D}$ are excited

Graphical condition

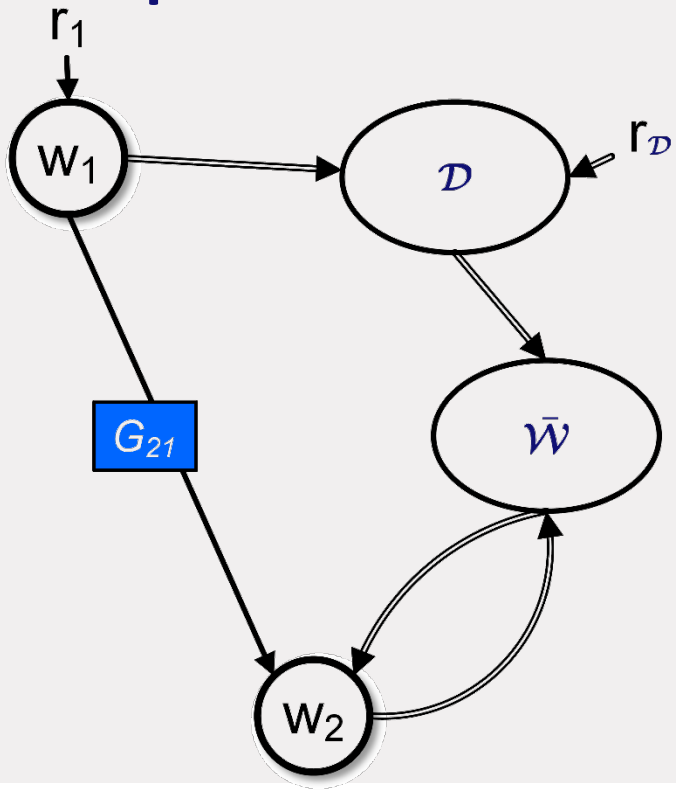

- $\mathcal{D}$ is a disconnecting set that intersects all directed paths from w_1 to $\bar{\mathcal{W}}$
- Equivalent reformulation of the path-based conditions in [1,2]

Graphical condition:

- $\exists$ $\mathcal{D}$ such that signals in $\mathcal{D}$ are excited by excitation signals or noise signals
- w_1 is excited

$\Longrightarrow$ G_{21} is generically identifiable

[1] J. M. Hendrickx et al., *IEEE-TAC*, 2019.

[2] H. Weerts et al., *CDC*, 2018;

Graphical condition

- An equivalent formulation of the path-based conditions [1,2] using disconnecting sets

- The condition can lead to the design of locations of excitation signals for generic identifiability of a single module

[1] J. M. Hendrickx et al., *IEEE-TAC*, 2019.

[2] H. Weerts et al., *CDC*, 2018;

Contents

Synthesis approach

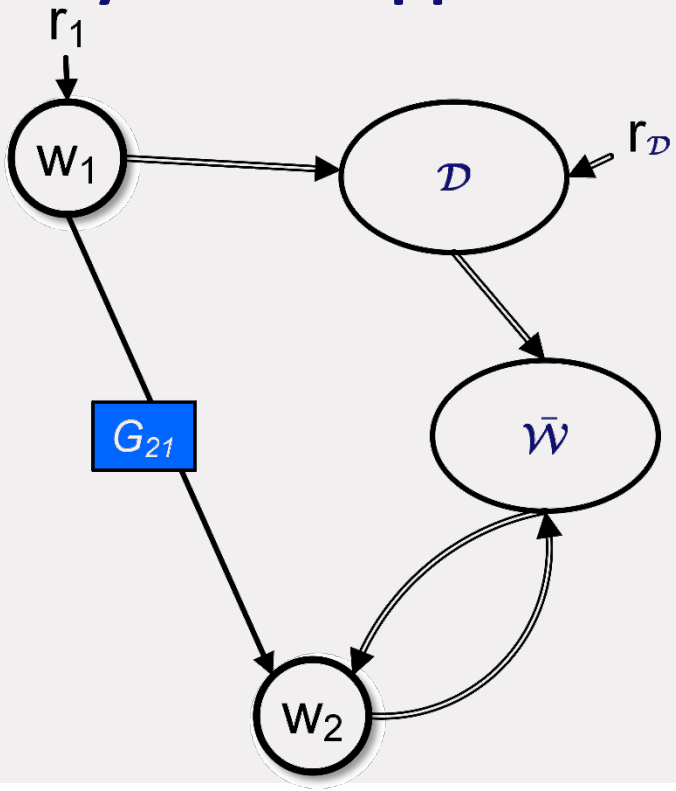

- What signals to excite such that G_{21} is generically identifiable?

1. Compute a disconnecting set $\mathcal{D}$ from w_1 to $\bar{\mathcal{W}}$

2. Excite $w_1(t)$ and $\mathcal{D}$ directly or indirectly through vertex disjoint paths

A. Schrijver, 2003.

Synthesis approach

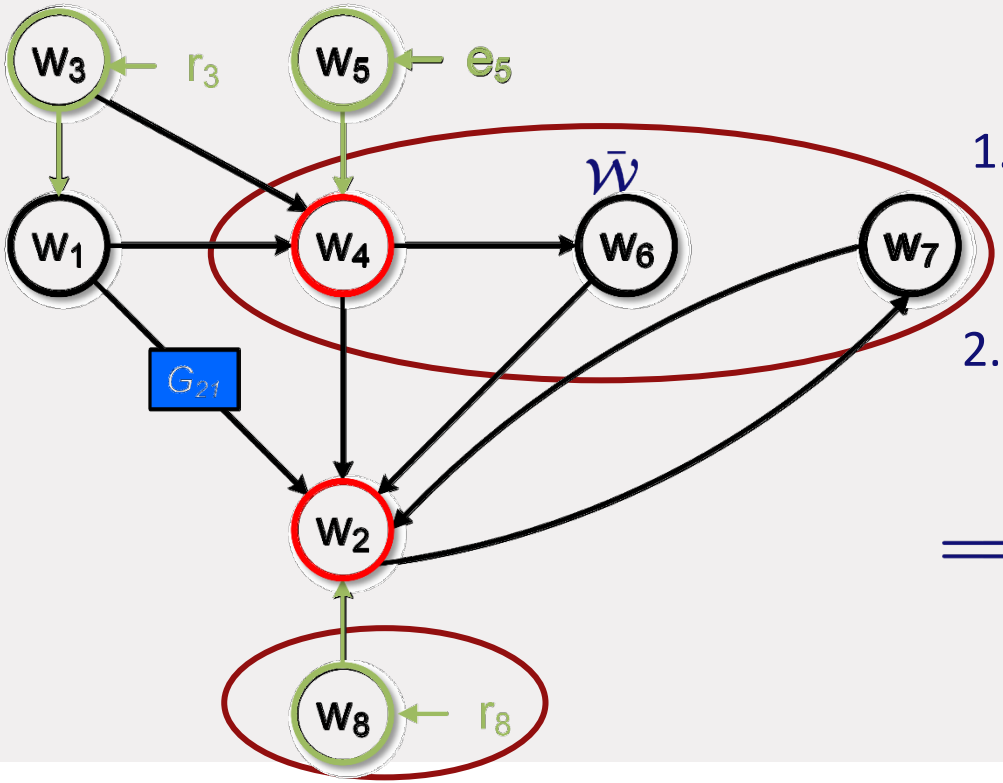

1. Compute a disconnecting set $\mathcal{D}$ from w_1 to $\bar{\mathcal{W}}$
2. Excite $w_1(t)$ and $\mathcal{D}$ indirectly

$\Longrightarrow$ G_{21} generically identifiable

Further extension

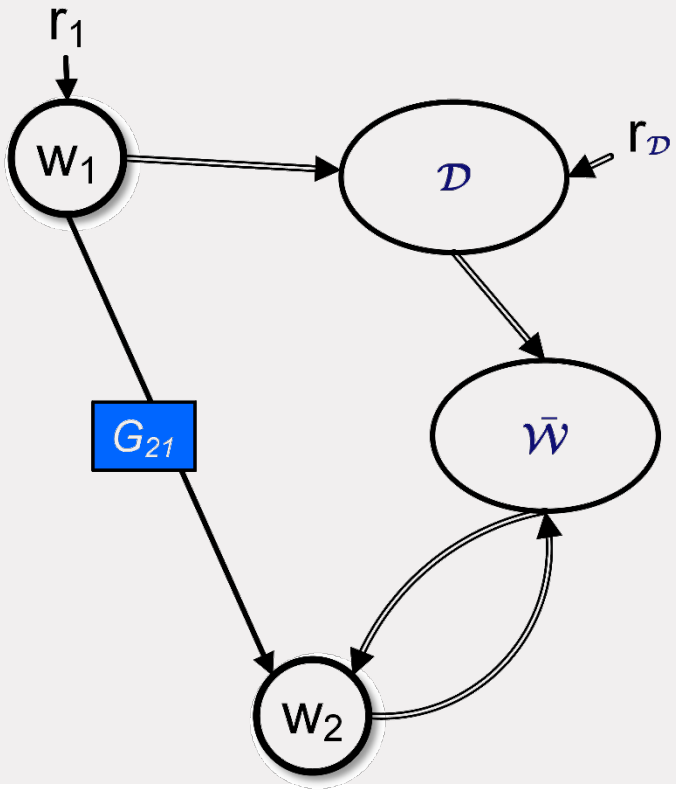

- A novel indirect identification method can be also derived as an extension of [1]
- When the excitation comes from excitation signals instead of noises
- Let $\bar{\mathcal{R}} = \{r_1, r_{\mathcal{D}}\}$ and $\tilde{\mathcal{W}} = \{w_1, \mathcal{D}\}$

1. Compute estimates $\hat{T}_{\tilde{\mathcal{W}}\bar{\mathcal{R}}}$ and $\hat{T}_{w_2\bar{\mathcal{R}}}$

2. Estimate of G_{21}: $\hat{G}_{21} = \hat{T}_{w_2\bar{\mathcal{R}}}\hat{T}^{\dagger}_{\tilde{\mathcal{W}}\bar{\mathcal{R}}}$

- It is only necessary to measure $\tilde{\mathcal{W}}$ and the output for generic identifiability of G_{21}

[1] M. Gevers et al., IFAC PapersOnLine, 2018.

Conclusions

- Reformulation of the path-based conditions [1,2] using the disconnecting set from the input of interest and the other inputs of the output

- The input and the signals in the disconnecting set should be excited for generic identifiability of the module

- The above observation leads to the synthesis approach

[1] J. M. Hendrickx et al., *IEEE-TAC*, 2019.

[2] H. Weerts et al., *CDC*, 2018;

Thank you for your attention!