System Identification
Lecture 8

Identification in Dynamic Networks

Paul Van den Hof

Control Systems Group
Eindhoven University of Technology

Contents

What is a dynamic network?

Decentralized process control

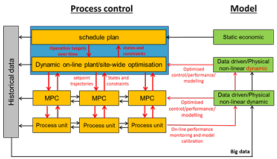

Smart power grid

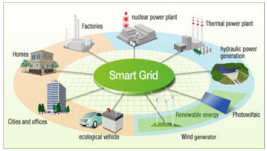

Betterworldsolutions.eu

Stock market

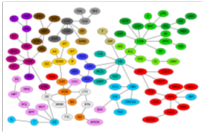

Materassi and Innocenti, 2010

PCB testing

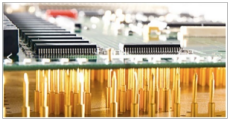

T&M Solutions, Romex BV

Autonomous driving

www.envidia.com

Brain network

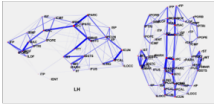

P. Hagmann et al. (2008)

Hydrocarbon reservoirs

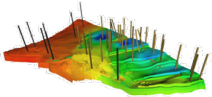

Mansoori (2014)

Physiological models

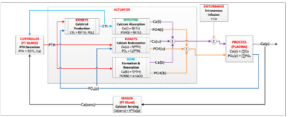

Christie, Achenie and Ogunnaike (2014)

- Systems become more and more interconnected and large scale
- The scope of systems' optimization becomes wider (complex systems)
  From components/units to systems to systems-of-systems
- Modeling, monitoring, control and optimization actions become distributed
- Data is playing an increasing role in monitoring, decision making, control of (highly autonomous) smart systems (machine learning, AI)

Dynamic networks from an identification perspective

Basic building block:

$$w_j(t) = \sum_{k \in \mathcal{N}_j} G^0_{jk}(q) w_k(t) + r_j(t) + v_j(t)$$

w_j: node signal
r_j : external excitation signal
v_j : (unmeasured) disturbance, stationary stochastic process
G^0_{jk}: modules $\mathcal{N}_j \subset \{\mathbb{Z} \cap [1, L] \backslash \{j\}\}$

Node signals: $w_1, \cdots w_L$
Interconnection structure / topology of the network is encoded in $\mathcal{N}_j,\ j = 1, \cdots L$

Collecting all equations:

$$\begin{bmatrix} w_1 \\ w_2 \\ \vdots \\ w_L \end{bmatrix} = \underbrace{\begin{bmatrix} 0 & G^0_{12} & \cdots & G^0_{1L} \\ G^0_{21} & 0 & \ddots & G^0_{2L} \\ \vdots & \ddots & \ddots & \vdots \\ G^0_{L1} & G^0_{L2} & \cdots & 0 \end{bmatrix}}_{\text{Network matrix } G^0} \begin{bmatrix} w_1 \\ w_2 \\ \vdots \\ w_L \end{bmatrix} + R^0 \begin{bmatrix} r_1 \\ r_2 \\ \vdots \\ r_K \end{bmatrix} + H^0 \begin{bmatrix} e_1 \\ e_2 \\ \vdots \\ e_p \end{bmatrix}$$

$$w(t) = G^0(q)w(t) + R^0(q)r(t) + v(t); \quad v(t) = H^0(q)e(t); \quad cov(e) = \Lambda$$

- Typically R^0 is just a (static) selection matrix, indicating which nodes have an excitation signal.
- The topology of the network is encoded in the structure (non-zero entries) of G^0.
- r and e are called external signals.

[1] Van den Hof et al., Automatica, *49*, 2994-3006, 2013.

Block diagram

$$w = G^0 w + R^0 r + H^0 e$$

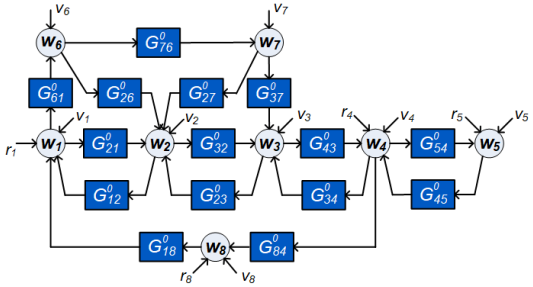

Assumptions:

- Total of L nodes, no self-loops
- Network is well-posed and stable, i.e. $(I - G^0)^{-1}$ exists and is stable
- Modules are dynamic, LTI, proper, may be unstable
- Disturbances can be correlated: H^0 not necessarily diagonal

When choosing $G_{jk}(q) = g_{jk} q^{-1}$ and allowing self-loops, a state-space model occurs.

Examples

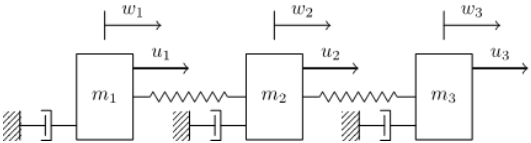

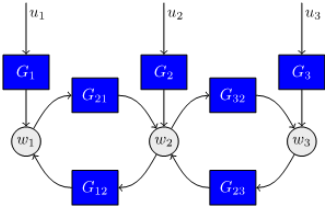

Networks of (dampled) oscillators

- Power systems, vehicle platoons, thermal building dynamics
- Spatially distributed
- Bilaterally coupled
- No central coordination: local identification problems

Examples

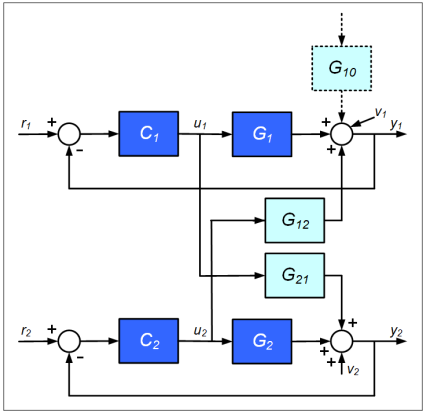

Decentralized MPC

2 interacting MPC loops

Target:
Identify interacting dynamics G_{12}, G_{21}

Addressed in [1] for the situation $G_{12} = 0$ (no cycles)

[1] R.D. Gudi and J.B. Rawlings, AIChE Journal, 52(6), 2198-2210, 2008.

Identification questions

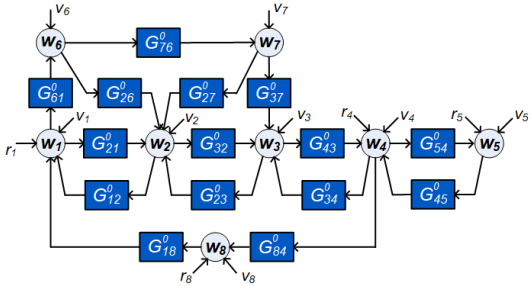

Many data-driven modeling questions:

- Identification of the full network
- Identification of a single module
- Identifiability
- Sensor and actuator locations
- Topology estimation
- Fault detection and diagnosis
- Detecting/handling nonlinear modules

Available measurement data: (A selection of) node signals w_i, and excitation signals r_i.
Prior knowledge: topology and/or the dynamics of some modules may be known

Identifiability of a full network

Question:

Under which conditions can different network models be distinguished from each other on the basis of measured signals w, r?

The identifiability problem:

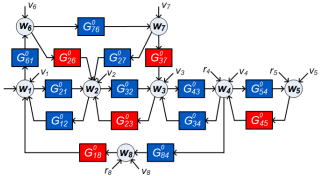

The network **model**:

$$w(t) = G(q)w(t) + R(q)r(t) + H(q)e(t)$$

can be transformed with any rational $P(q)$:

$$P(q)w(t) = P(q)\{G(q)w(t) + R(q)r(t) + G(q)e(t)\}$$

to an **equivalent model**:

$$w(t) = \tilde{G}(q)w(t) + \tilde{R}(q)r(t) + \tilde{H}(q)\tilde{e}(t)$$

$\Longrightarrow$ **Nonuniqueness**, unless there are structural constraints on G, R, H.

Network equation in terms of external signals:

$$w(t) = T_{wr}(q)r(t) + \underbrace{T_{we}(q)e(t)}_{\tilde{v}(t)}$$

with $T_{wr} = (I - G)^{-1}R$ and $T_{we} = (I - G)^{-1}H$.

On the basis of measured w and r, we can typically identify from data:

$$T_{wr}, \Phi_{\tilde{v}}$$

provided that r is persistently exciting of a sufficiently high order.

Consider a network model set: $\mathcal{M} = \{M(\theta) = (G(\theta), R(\theta), H(\theta), \Lambda(\theta))\}_{\theta \in \Theta}$

Definition Network identifiability[1]

For a network model set $\mathcal{M}$, consider a model $M(\theta_0) \in \mathcal{M}$ and the implication

$$\left.\begin{array}{r} T_{wr}(q, \theta_0) = T_{wr}(q, \theta_1) \\ \Phi_{\tilde{v}}(\omega, \theta_0) = \Phi_{\tilde{v}}(\omega, \theta_1) \end{array}\right\} \Longrightarrow \{ \; M(\theta_0) = M(\theta_1),$$

for all $M(\theta_1) \in \mathcal{M}$

Then $\mathcal{M}$ is

- globally identifiable from (w, r) at $M(\theta_0)$ if the implication holds for $M(\theta_0)$;
- globally identifiable from (w, r) if it holds for all $M(\theta_0) \in \mathcal{M}$;
- generically identifiable[2] from (w, r) if it holds for almost all $M(\theta_0) \in \mathcal{M}$;

[1] Weerts et al., Automatica, *89*, 247-258, March 2018. [2] Hendrickx et al., IEEE Trans. Autom. Control, *64*, 2240-2253, June 2019.

If

- All modules in $G(q,\theta)$ are strictly proper, or
- There are no algebraic loops in G, and $H^\infty(\theta)\Lambda(\theta)H^\infty(\theta)^T$ is diagonal, with $H^\infty := \lim_{z\to\infty} H(z,\theta)$

then the equality

$$\Phi_{\tilde{v}}(\omega,\theta_0) = \Phi_{\tilde{v}}(\omega,\theta_1)$$

is equivalently replaced by

$$T_{we}(q,\theta_0) = T_{we}(q,\theta_1).$$

Motivation:

In the spectrum $\Phi_{\tilde{v}}(z) = T_{we}(z)\Lambda T_{we}(1/z)^T$ with $T_{we}(z) = (I - G(z))^{-1}H(z)$ the contribution of $z \to \infty$ needs to be uniquely assigned.

Denote $u := (r^T, e^T)^T$.

$$T_{wu} = (I - G(\theta))^{-1} U(\theta) \qquad \text{with } U(\theta) := \begin{bmatrix} R(\theta) & H(\theta) \end{bmatrix}$$

Then

$$(I - G(\theta)) T_{wu} = U(\theta)$$

Question:

Do $G(\theta), U(\theta)$ uniquely follow from T_{wu}?

Note:
$U(q, \theta) \in \mathbb{R}(q)^{L \times (K+p)}$ where $K + p$ is the number of external $r + e$ signals.

Sufficient condition for network identifiability[1],[2] - full excitation case

Consider model set $\mathcal{M}$, and let $U(q,\theta)$ be full row rank $\forall\theta$.
Then $\mathcal{M}$ is globally network identifiable from (r,w) if there exists a nonsingular and parameter-independent matrix $Q(z) \in \mathbb{R}^{(K+p)\times(K+p)}$ such that

$$U(q,\theta)Q = \begin{bmatrix} D(\theta) & F(\theta) \end{bmatrix}$$

with $D(\theta)$ diagonal and full rank for all θ.

- The rank condition on $U(q,\theta)$ implies that $K+p \geq L$, i.e. there are at least as many external signals as there are node signals (full excitation).
- The resulting condition on $U(q,\theta)$ is independent of the structure in $G(q,\theta)$.

[1] Gonçalves and Warnick, IEEE Trans. Autom. Control, *53*, 1670-1674, 2008; [2] Weerts et al., Automatica, *89*, 247-258, March 2018.

Reasoning:

$$(I - G(\theta))T_{wu}Q = U(\theta)Q$$

$$(I - G(\theta))T_{wu}Q = \begin{bmatrix} D(\theta) & F(\theta) \end{bmatrix}$$

With $T_{wu}Q = \begin{bmatrix} A & B \end{bmatrix}$ and A full rank, it follows that

$$\begin{aligned} D(\theta)^{-1}(I - G(\theta))A &= I \\ (I - G(\theta))B &= F(\theta) \end{aligned}$$

Since $D(\theta)$ is diagonal and $I - G(\theta)$ is hollow, uniqueness of $D(\theta)$ and $G(\theta)$ follows. Then also $F(\theta)$ is unique. ■

Example 1

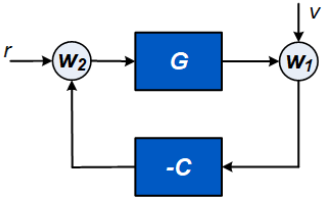

Parametrized model set $\mathcal{M}$ with

$$G(\theta) = \begin{bmatrix} 0 & G(\theta) \\ -C(\theta) & 0 \end{bmatrix}, \quad R(\theta) = \begin{bmatrix} 0 \\ 1 \end{bmatrix}, \quad H(\theta) = \begin{bmatrix} H(\theta) \\ 0 \end{bmatrix}$$

$U(\theta) = \begin{bmatrix} 0 & H(\theta) \\ 1 & 0 \end{bmatrix}$ can be made diagonal by elementary column operations

$\Longrightarrow$ $\mathcal{M}$ is globally network identifiable. ■

Example 2

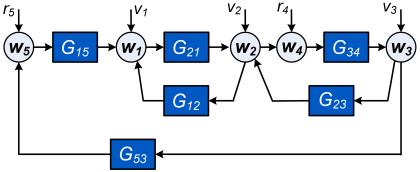

Consider a model set where v_1 and v_2 are allowed to be correlated:

$$H(\theta) = \begin{bmatrix} H_{11}(\theta) & H_{12}(\theta) & 0 \\ H_{21}(\theta) & H_{22}(\theta) & 0 \\ 0 & 0 & H_{33}(\theta) \\ 0 & 0 & 0 \\ 0 & 0 & 0 \end{bmatrix}, \; R = \begin{bmatrix} 0 & 0 \\ 0 & 0 \\ 0 & 0 \\ 1 & 0 \\ 0 & 1 \end{bmatrix}$$

There is enough excitation, but U can not be transformed to a diagonal matrix.
$\Longrightarrow$ No conclusion that holds for *any choice of* $G(\theta)$

Towards a more general result that takes account of the structure of $G(\theta)$

$$(I - G(\theta))T_{wu} = U(\theta)$$

Do $G(\theta), U(\theta)$ uniquely follow from T_{wu}?

Consider row j of this equation.
Reorder the columns of $(I - G(\theta))$ and $U(\theta)$ such that

$$\begin{bmatrix} G_1(\theta) & G_2 \end{bmatrix}_{j\star} PT_{wu} = \begin{bmatrix} U_1 & U_2(\theta) \end{bmatrix}_{j\star} Q \qquad P, Q \text{ permutation matrices}$$

Then

$$\begin{bmatrix} G_1(\theta) & G_2 \end{bmatrix}_{j\star} \begin{bmatrix} A & B \\ C & D \end{bmatrix} = \begin{bmatrix} U_1 & U_2(\theta) \end{bmatrix}_{j\star} \quad \text{with} \quad \begin{bmatrix} A & B \\ C & D \end{bmatrix} = PT_{wu}Q^{-1}$$

$G_1(\theta)_{j\star}, U_2(\theta)_{j\star}$ are uniquely determined if A has full row rank.

Sufficient condition for network identifiability[1] - general case

Consider model set $\mathcal{M}$, and define for each $j \in [1, L]$:
$\breve{T}_j :=$ the transfer function from

- all external signals (r, e) that do not enter w_j through a parametrized module, to
- all node signals w that map to w_j through a parametrized module.

Then $\mathcal{M}$ is globally network identifiable from (r, w) if for all $j \in [1, L]$:

$$\breve{T}_j \text{ is full row rank for all } \theta \in \Theta.$$

The result allows for $K + p < L$ and distinguishes between parametrized and non-parametrized (fixed) modules in $\mathcal{M}$.

[1] Weerts et al., Automatica, *89*, 247-258, March 2018.

An immediate consequence of the condition is that

$$\sharp \text{ parametrized entries in } \begin{bmatrix} G(\theta) & R(\theta) & H(\theta) \end{bmatrix}_{j\star} \leq K + p$$

Proof:

Follows directly from full rank condition on $\breve{T}_j$:

$$\sharp \text{ param } G(\theta)_{j\star} \leq K + p - \sharp \text{ param } [R(\theta) \; H(\theta)]_{j\star}$$

Example: 5 node network (continued)

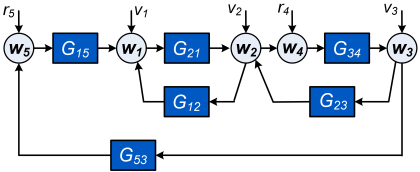

If we restrict the structure of $G(\theta)$ to

$$G(\theta) = \begin{bmatrix} 0 & G_{12}(\theta) & 0 & 0 & G_{15}(\theta) \\ G_{21}(\theta) & 0 & G_{23}(\theta) & 0 & 0 \\ 0 & 0 & 0 & G_{34}(\theta) & 0 \\ 0 & 1 & 0 & 0 & 0 \\ 0 & 0 & G_{53}(\theta) & 0 & 0 \end{bmatrix}; \quad [H \;\; R] = \underbrace{\begin{bmatrix} H_{11}(\theta) & H_{12}(\theta) & 0 & 0 & 0 \\ H_{21}(\theta) & H_{22}(\theta) & 0 & 0 & 0 \\ 0 & 0 & H_3(\theta) & 0 & 0 \\ 0 & 0 & 0 & 1 & 0 \\ 0 & 0 & 0 & 0 & 1 \end{bmatrix}}_{K+p=5}$$

Each row has less than $K+p$ parametrized entries, so this allows to verify the matrix rank conditions for identifiability.

Example: 5 node network (continued)

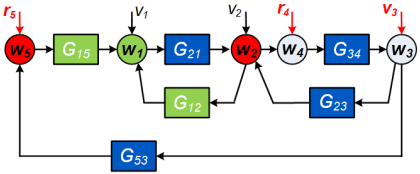

If we restrict the structure of $G(\theta)$ to

$$G(\theta) = \begin{bmatrix} 0 & G_{12}(\theta) & 0 & 0 & G_{15}(\theta) \\ G_{21}(\theta) & 0 & G_{23}(\theta) & 0 & 0 \\ 0 & 0 & 0 & G_{34}(\theta) & 0 \\ 0 & 1 & 0 & 0 & 0 \\ 0 & 0 & G_{53}(\theta) & 0 & 0 \end{bmatrix}; \quad [H \;\; R] = \underbrace{\begin{bmatrix} H_{11}(\theta) & H_{12}(\theta) & 0 & 0 & 0 \\ H_{21}(\theta) & H_{22}(\theta) & 0 & 0 & 0 \\ 0 & 0 & H_3(\theta) & 0 & 0 \\ 0 & 0 & 0 & 1 & 0 \\ 0 & 0 & 0 & 0 & 1 \end{bmatrix}}_{K+p=5}$$

For $j = 1$, we need to consider the mappings related to w_1, i.e.

$$\breve{T}_1 : \begin{bmatrix} v_3 \\ r_4 \\ r_5 \end{bmatrix} \rightarrow \begin{bmatrix} w_2 \\ w_5 \end{bmatrix} \quad \text{has to have full row rank } \forall \theta \in \Theta$$

Issues:

- Such a rank test is not easy to apply
- And needs to be done for every $j = 1, \cdots L$

Theorem - Generic rank and vertex disjoint paths[1],[2],[3]

The **generic rank** of a transfer function matrix between

inputs u and nodes w

is equal to the maximum number of **vertex disjoint paths** between the sets of inputs and outputs.

A path-based check on the topology of the network can decide whether the conditions for identifiability are satisfied generically.

[1] Van der Woude, 1991; [2] Bazanella et al., CDC 2017; [3] Hendrickx et al., IEEE TAC, 2019.

Vertex-disjoint paths:

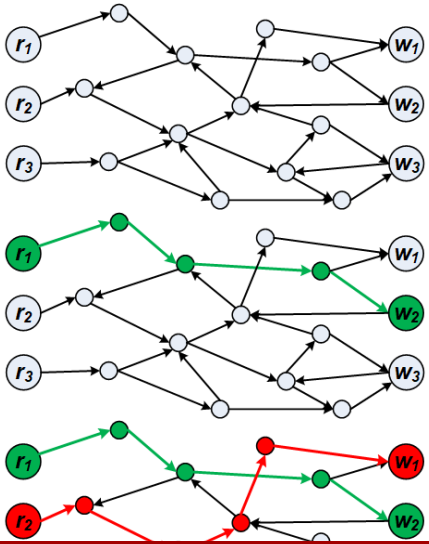

Check for the 5-node example:

For $j = 1$:

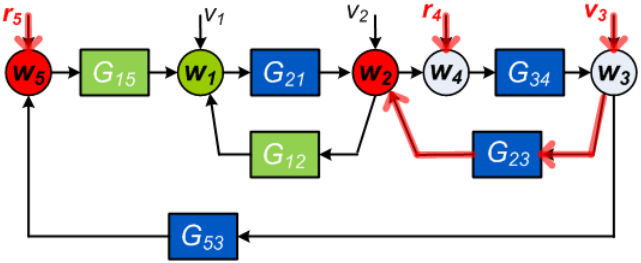

Check for the 5-node example:

For $j = 2$:

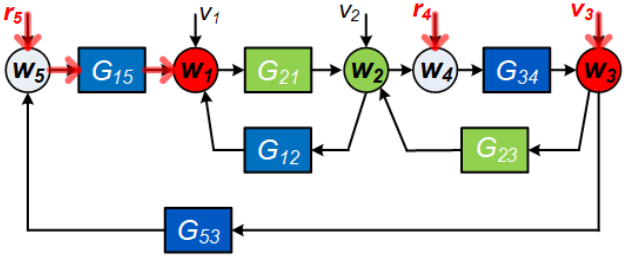

Check for the 5-node example:

For $j = 3$:

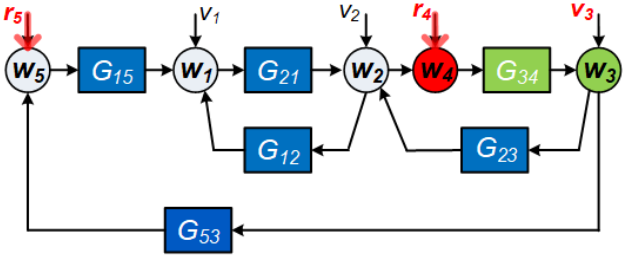

Check for the 5-node example:

For $j = 4$:

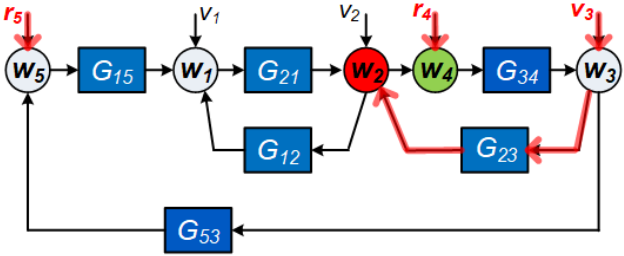

Check for the 5-node example:

For $j = 5$:

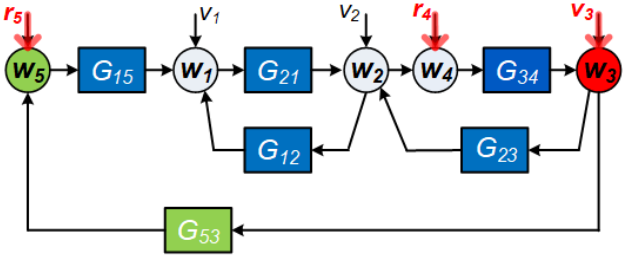

Conclusion:

5-node example is generically identifiable

If the feedback connection $w_3 \to w_2$ were to be changed to $w_3 \to w_4$, then lack of identifiability occurs for the situation $j = 1$.

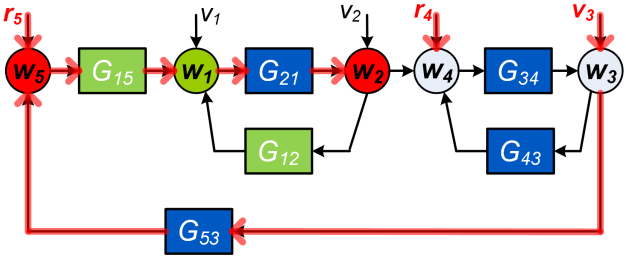

Summary identifiability

- Network identifiability defined on a network **model set** is determined by
  - Topology of then network
  - Presence and correlation structure of disturbances v
  - Location of external excitation signals r
- Model set allows parametrized and non-parametrized entries[1].
- Sufficient conditions for different cases:
  - full excitation case; • general case (dependent on topology of $G(\theta)$)
- Path-based conditions for verifying **generic identifiability**
- But graphical test does not scale well, and does not provide design rules: e.g. where to allocate external excitation signals to guarantee identifiability

[1] Fixed entries need to satisfy some mild regularity conditions for the path-based genericity results to hold, see Shi et al., ArXiv, 2020.

Graphical algorithm

Question:

Where to allocate external excitation signals in a network in order to guarantee generic identifiability of the network model set?

Full measurement-case. i.e. all node signals are available.

Graphical approach to decompose the network into pseudotrees, see [1]

[1] X. Cheng, S.Shi and P.M.J. Van den Hof, CDC 2019 and ArXiv: 1910.04525, 2019; provisionally accepted for IEEE Trans. Autom. Control, 2020.

Definition Pseudotree

A connected simple directed graph with number of vertices ≥ 2 is called a (directed) **pseudotree** if for all vertices i, the number of in-neighbors is ≤ 1.

Two typical examples:

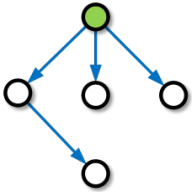

rooted tree

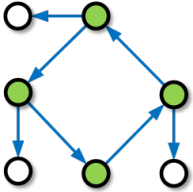

cycle with outgoing trees

Observation:

An external signal added to any of the (green) roots reaches all vertices in the pseudotree

Strategy:

- Cover the graph of a network with a set of **disjoint pseudotrees**
- Excite (one of the) root(s) of each pseudotree with an external signal

(Edge-)disjoint pseudotrees

Two pseudotrees are (edge-)disjoint if

- They do not share any edges, and
- All outgoing edges of a vertex belong to the same pseudotree

Examples of disjoint and non-disjoint pseudotree coverings:

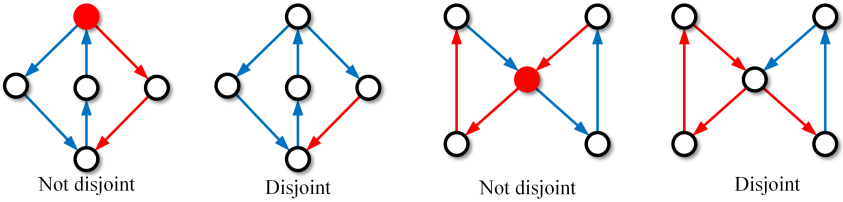

Synthesis solution for network excitation

A network model set $\mathcal{M}$ is generically identifiable if

- Its graph can be covered by K disjoint pseudotrees, and
- There are K independent external signals entering at a root of each pseudotree

Proof Sketch

Let $\mathcal{T}_1, \mathcal{T}_2, ..., \mathcal{T}_K$ be disjoint pseudotrees that cover all the edges of the graph $\mathcal{G}$ and τ_k be an excited root node in pseudotree $\mathcal{T}_k$.
The definition of disjoint pseudotrees implies that

1. two disjoint pseudotrees cannot share common root nodes, i.e., $\tau_i \neq \tau_j$, for all $i \neq j$;
2. the in-neighbors of each node in $\mathcal{G}$ should be in distinct pseudotrees;
3. paths in different disjoint pseudotrees are vertex-disjoint, if they have no common starting or ending nodes.

The above three points guarantees that, for any node j in $\mathcal{G}$, there exist $|\mathcal{N}_j^-|$ vertex-disjoint paths from the set $\{\tau_1, \tau_2, ..., \tau_K\}$ to $\mathcal{N}_j^-$, where $\mathcal{N}_j^-$ is the set of in-neighbors of j. The result holds for all nodes in $\mathcal{G}$, thus generic identifiability of $\mathcal{M}$ follows.

Example: 5 node network (revisited)

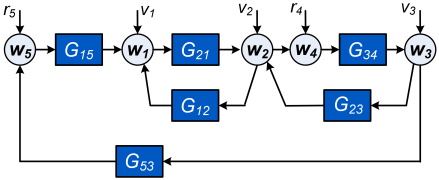

When discarding the present external signals, the graph becomes:

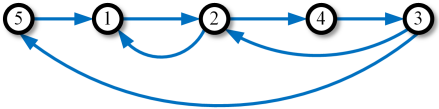

The graph can be covered by two disjoint pseudotrees:

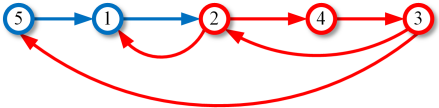

Note: this covering is non-unique!

Example: 5 node network (revisited)

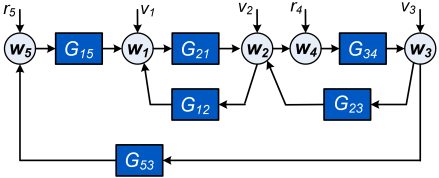

When discarding the present external signals, the graph becomes:

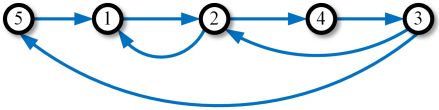

Two independent excitations guarantee network identifiability:

One of $v_2/r_4/v_3$ and r_5 would be sufficient

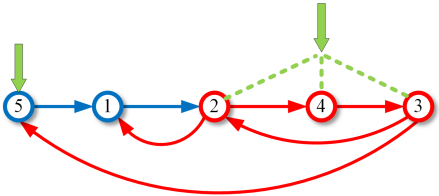

If parametrized noise models are included in the model set, then we use an **extended graph**, including the white noise disturbance inputs as nodes:

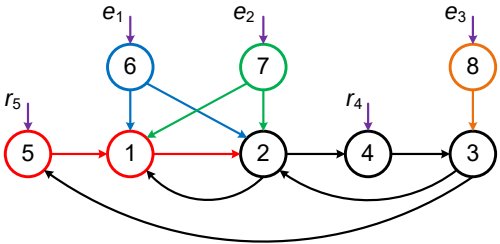

External signals $r_2/r_4/r_3$ and r_5 guarantee generic identifiability

Where to allocate external signals for generic network identfiability?

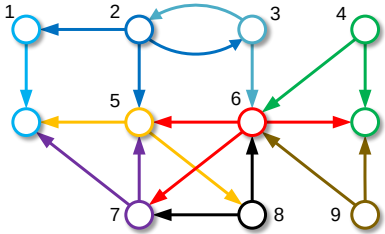

Start from an elementary covering (all outgoing edges from a node in one pseudotree)

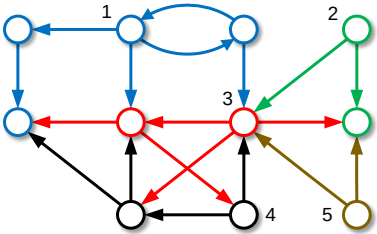

Then pseudotrees can be merged to reduce their number (and thus the required external signals)

The merging can be done through an automated algorithm.

Summary Graphical algorithm

- Attractive graphical approach for verifying generic identifiability conditions
- As well as for synthesising the required experimental setup (allocating external signals), starting from present disturbances
- The results apply to the situation of non-parametrized/fixed modules in $\mathcal{M}$. The fixed modules can be excluded from the graph-covering.

Single module identification

- First full MISO
- Then removing in-neighbours with immersion.
- Indirect and direct approaches
- Mention relation with identifiability

Single module identification

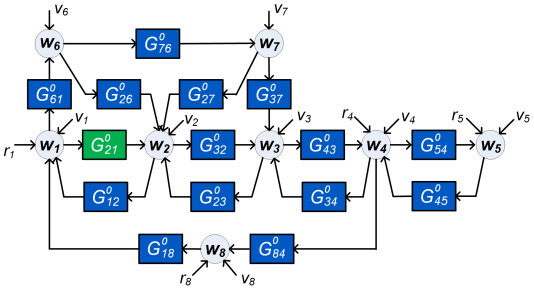

The problem:

For a network with known topology:

Identify G^0_{21} on the basis of selected measured signals (w, r)

Single module identification

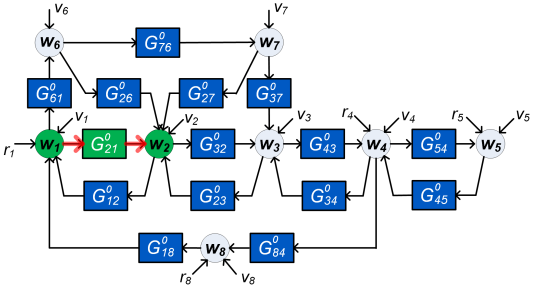

Naive approaches:

- identify based on w_2 and w_1; or
- identify based on $T_{w_2 r_1} T_{w_1 r_1}^{-1}$

do not work,

e.g., because of parallel paths.

Single module identification

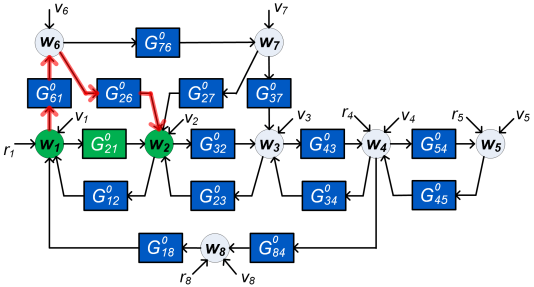

Naive approaches:

- identify based on w_2 and w_1; or
- identify based on $T_{w_2 r_1} T_{w_1 r_1}^{-1}$

do not work,

e.g., because of parallel paths.

Approaches to the problem:

1. **Prediction error methods**

   VdH et al. (2013); Dankers et al. (2015, 2016); Galrinho et al. (2017); Everitt et al. (2018); Gevers et al. (2018); Bazanella et al. (2017, 2019), Hendrickx et al. (2019), Ramaswamy et al. (2018, 2019, 2020);

   generalizations of closed-loop methods, requiring choice of predictor model

2. **Alternatives**

   - Non-parametric methods, based on Wiener filters an d-deparation

     Materassi & Salapaka (2015,2020)

   - Subspace methods

     Yu and Verhaegen, TAC (2018)

Prediction error methods:

Choice of predictor model, leading to prediction errors:

Direct method: $$\varepsilon(t,\theta) = \bar{H}(q,\theta)^{-1}[w_{\mathcal{Y}}(t) - \bar{G}(q,\theta)w_{\mathcal{D}}(t)]$$

direct estimation of target module

Indirect method: $$\varepsilon(t,\theta) = \bar{H}(q,\theta)^{-1}[w_{\mathcal{Y}}(t) - \bar{T}(q,\theta)r_{\mathcal{D}}(t)]$$

indirect estimation through postprocessing

Generalized method: $$\varepsilon(t,\theta) = \bar{H}(q,\theta)^{-1}[w_{\mathcal{Y}}(t) - \bar{G}(q,\theta)w_{\mathcal{D}_w}(t) - \bar{T}(q,\theta)r_{\mathcal{D}_r}(t)]$$

Prediction error methods:

Main differences:

Direct method: $$\varepsilon(t,\theta) = \bar{H}(q,\theta)^{-1}[w_{\mathcal{Y}}(t) - \bar{G}(q,\theta)w_{\mathcal{D}}(t)]$$

Predictor inputs $w_{\mathcal{D}}(t)$ receive excitation from both r and e signals

Indirect method: $$\varepsilon(t,\theta) = \bar{H}(q,\theta)^{-1}[w_{\mathcal{Y}}(t) - \bar{T}(q,\theta)r_{\mathcal{D}}(t)]$$

Predictor inputs $r_{\mathcal{D}}(t)$ receive excitation from r signals only

Overall: indirect methods have stronger requirements on the presence of measurable external excitation signals $r \rightarrow$ more expensive experiments

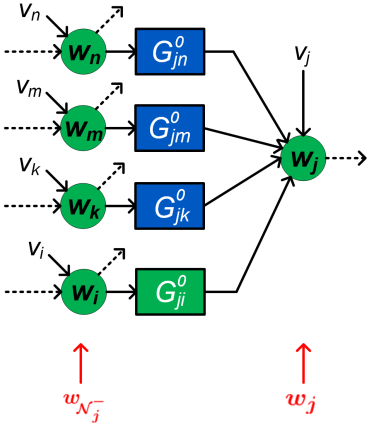

Multi-input single-output identification problem

to be addressed by a closed-loop identification method

Indirect methods

How to select predictor inputs and outputs?

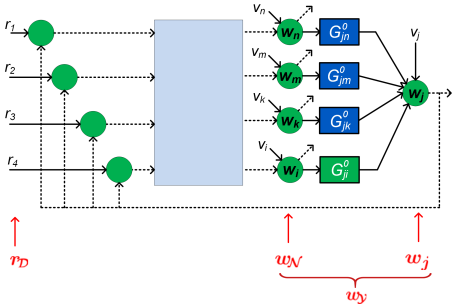

MISO identification problem

- Select output w_j and all its in-neighbors $w_{\mathcal{N}}$
- Estimate $\bar{T}_{\mathcal{N}r}$ and $\bar{T}_{jr}$ and determine:

$$\hat{G}_{j\mathcal{N}} = \hat{T}_{jr}\hat{T}_{\mathcal{N}r}^{-1}$$

  or through IV/two-stage method
- Freedom of location of r signals
- Some signals in $w_{\mathcal{N}}$ may be discarded

Indirect methods

How to select predictor inputs and outputs?

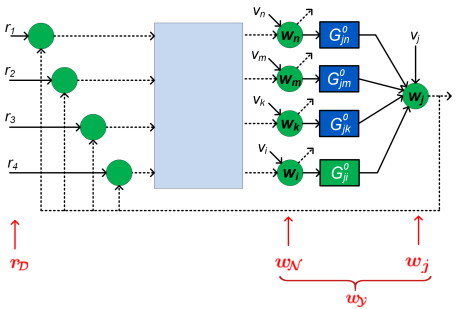

Selection of signal in $w_{\mathcal{Y}}$:

- Parallel path and loop condition

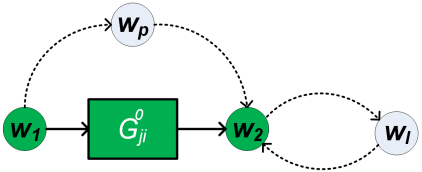

All parallel paths and loops around the output should pass through a node in $w_{\mathcal{Y}}$

Immersion

The parallel path and loop condition results from the theory of **immersion**:

removing node signals, while retaining the behaviour of the remaining nodes

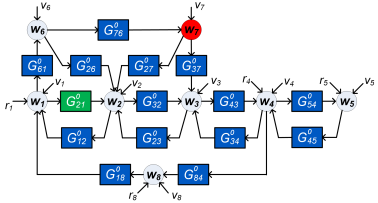

$\Longrightarrow$

Immersing w_7

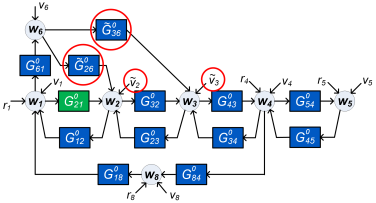

Modules and disturbances change, but G^0_{ji} remains invariant if the parallel path and loop condition is satisfied.

Immersion

Algebraic operation:

$$\begin{bmatrix} w_{\mathcal{A}} \\ w_{\mathcal{Z}} \end{bmatrix} = \begin{bmatrix} G_{\mathcal{AA}} & G_{\mathcal{AZ}} \\ G_{\mathcal{ZA}} & G_{\mathcal{ZZ}} \end{bmatrix} \begin{bmatrix} w_{\mathcal{A}} \\ w_{\mathcal{Z}} \end{bmatrix} + \begin{bmatrix} R_{\mathcal{AA}} & R_{\mathcal{AZ}} \\ R_{\mathcal{ZA}} & R_{\mathcal{ZZ}} \end{bmatrix} \begin{bmatrix} r_{\mathcal{A}} \\ r_{\mathcal{Z}} \end{bmatrix} + \begin{bmatrix} H_{\mathcal{AA}} & H_{\mathcal{AZ}} \\ H_{\mathcal{ZA}} & H_{\mathcal{ZZ}} \end{bmatrix} \begin{bmatrix} e_{\mathcal{A}} \\ e_{\mathcal{Z}} \end{bmatrix}$$

Removing nodes $w_{\mathcal{Z}}$:

Solve 2nd (block) equation for $w_{\mathcal{Z}}$:

$$w_{\mathcal{Z}} = (I - G_{\mathcal{ZZ}})^{-1} \left\{ G_{\mathcal{ZA}} w_{\mathcal{A}} + R_{\mathcal{ZA}} r_{\mathcal{A}} + R_{\mathcal{ZZ}} r_{\mathcal{Z}} + H_{\mathcal{ZA}} e_{\mathcal{A}} + H_{\mathcal{ZZ}} e_{\mathcal{Z}} \right\}$$

and substitute this into the first (block) equation for $w_{\mathcal{A}}$.

Indirect methods

- Relatively simple methods for **consistent estimation** of the target module
- High requirements on presence of excitation signals r
  leading to "expensive" experiments
  No use of excitation through disturbance signals
- For consistency: no need of noise models

As alternative: direct method

Direct method

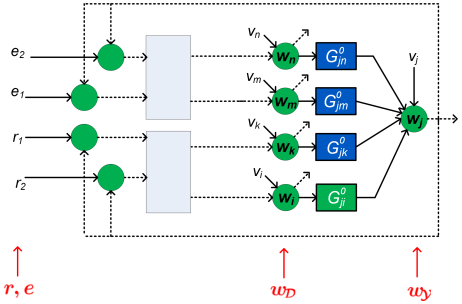

$$\varepsilon(t,\theta) = \bar{H}(q,\theta)^{-1}[w_\mathcal{Y}(t) - \bar{G}(q,\theta)w_\mathcal{D}(t)]$$

- Estimate transfer $w_\mathcal{D} \to w_\mathcal{Y}$ and model the disturbance process on the output
- consistent estimate and ML properties
- provided there is enough excitation through r and/or e

Input node set $w_\mathcal{D}$ can be further reduced (according to the PP& L condition)

Additional problem: the occurence of confounding variables

Direct method

Confounding variable:
Unmeasured signal that has unmeasured paths to both the input and output of an estimation problem

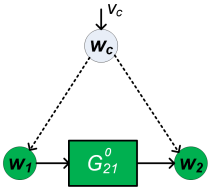

Estimation of the dynamics of G_{21}^0 gets distorted by w_c

This can occur if

- Disturbances v on $w_{\mathcal{D}}$ and $w_{\mathcal{Y}}$ are correlated, or
- Not all in-neighbors of w_j are included in $w_{\mathcal{D}}$.

Simple example - closed-loop

If v_1 and v_2 are correlated then the estimation problem

$$w_1 \to w_2$$

has a confounding variable, namely e_1 and e_2 leading to a biased estimate of G_{21}.

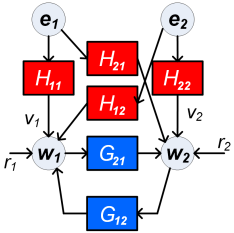

- An indirect method can handle this sitaution
- For the direct method we can change the estimation problem to

$$w_1 \to (w_1, w_2)$$

i.e. model the (correlated) disturbance on the output (w_1, w_2) with a 2×2 noise model

Direct method

Example of confounding variable handling:

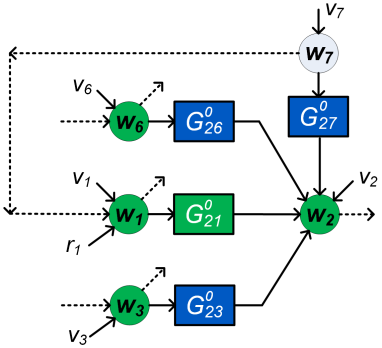

Non-measured w_7 is a confounding variable

Two possible solutions:

Direct method

Example of confounding variable handling:

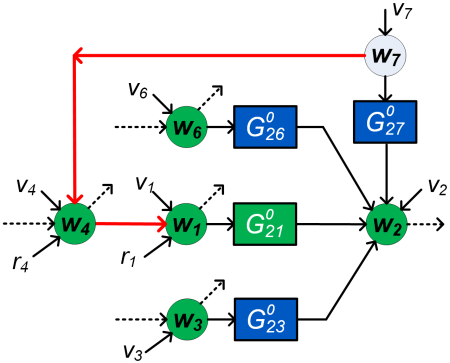

Non-measured w_7 is a confounding variable

Two possible solutions:

1. Include w_4 $\implies$ add predictor input

$$w_{\mathcal{D}} = \{w_1, w_3, w_4, w_6\}; \quad w_{\mathcal{Y}} = \{w_2\}$$

2. Predict w_1 too $\implies$ add predicted output

$$w_{\mathcal{D}} = \{w_1, w_3, w_6\}; \quad w_{\mathcal{Y}} = \{w_1, w_2\}$$

There are degrees of freedom in choosing the predictor model.

Consistency result

Conditions for consistent (and ML) estimation of G_{ji}:

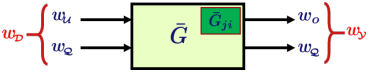

- System in the model set
- Parallel path and loop condition satisfied
- Confounding variables handled appropriately
- Data informativity: $\Phi_\kappa(\omega) > 0$ at a sufficient number of frequencies, with

$$\kappa = \begin{bmatrix} w_{\mathcal{D}} \\ w_o \\ \xi_{\mathcal{Q}} \end{bmatrix} \quad \text{with } \xi_{\mathcal{Q}} \text{ the innovation process of } w_{\mathcal{Q}}$$

- Requirements on presence of signals r increase with number of outputs

Summary

- Local module identification (so far) is based on knowledge of topology in G and H
- Because of PP&L condition: more modules need to be estimated
- For direct method: even more because of handling confounding variables
- Degrees of freedom in choosing predictor model
- Identification algorithms can become rather complex $\rightarrow$ empirical Bayes-type methods (with regularization).

Example

Target module: G_{21}

- w_2 is input, w_1 is output
- PP&L condition:
  add w_3 as input;

$$w_{\mathcal{D}} = \{w_2, w_3\} \qquad w_{\mathcal{Y}} = \{w_1\}$$

Because of correlated v_1 and v_3:
add w_3 to the output:

$$w_{\mathcal{D}} = \{w_2, w_3\} \qquad w_{\mathcal{Y}} = \{w_1, w_3\}$$

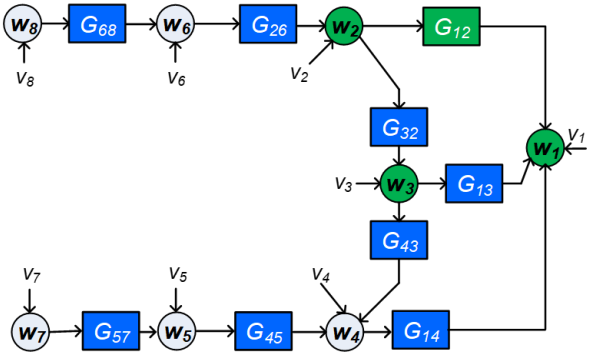

- v_1 correlated with v_3 and v_6
- v_4 correlated with v_5

Example

$$w_{\mathcal{D}} = \{w_2, w_3\} \qquad w_{\mathcal{Y}} = \{w_1, w_3\}$$

Because of correlated v_1, v_6:

Two options:

$$w_{\mathcal{D}} = \{w_2, w_3, w_6\} \quad w_{\mathcal{Y}} = \{w_1, w_3\}$$

or

$$w_{\mathcal{D}} = \{w_2, w_3\} \quad w_{\mathcal{Y}} = \{w_1, w_2, w_3\}$$

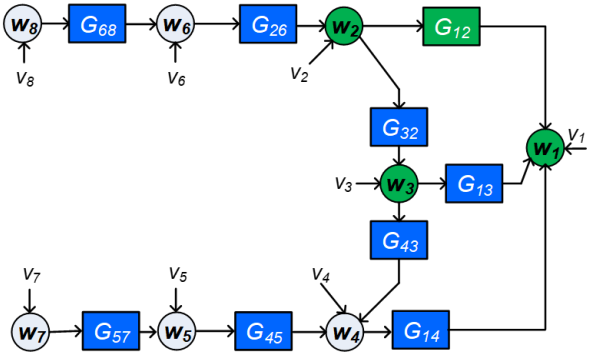

- v_1 correlated with v_3 and v_6
- v_4 correlated with v_5

Final remarks

- Considering "structure" adds a new dimension to the identification problem
- We focussed on the prime principles
- Concept of identifiability can be extended to the single module case, including graphical tests
- Identification problems require effective and scalable algorithms
- Sensor (and actuator) selection gets incorporated in the problem
- Experiment design and variance issue
- Topology estimation

Further reading

1. P.M.J. Van den Hof, A. Dankers, P. Heuberger and X. Bombois (2013). Identification of dynamic models in complex networks with prediction error methods - basic methods for consistent module estimates. *Automatica, 49*, no. 10, pp. 2994-3006.
2. A. Dankers, P.M.J. Van den Hof, P.S.C. Heuberger and X. Bombois (2016). Identification of dynamic models in complex networks with predictior error methods - predictor input selection. *IEEE Trans. Autom. Contr., 61*, pp. 937-952, 2016.
3. H.H.M. Weerts, P.M.J. Van den Hof and A.G. Dankers (2018). Identifiability of linear dynamic networks. *Automatica, 89*, pp. 247-258, March 2018.
4. X. Cheng, S. Shi and P.M.J. Van den Hof (2019). Allocation of excitation signals for generic identifiability of linear dynamic networks. Proc. 2019 CDC. ArXiv 1910.04525.
5. K.R. Ramaswamy and P.M.J. Van den Hof (2020). A local direct method for module identification in dynamic networks with correlated noise. ArXiv 1908:00976. Prov. accepted for IEEE Trans. Autom. Control.

And more references also available at my website.

A 40 minute survey presentation on local module identification in dynamic networks, presented at the 2020 IFAC World Congress, is available as video.